索　引　INDEX

		页/PAGE
一、使用说明	OPERATION GUIDE	
A. 安装	A. INSTALLATION	1
B. 马达与皮带	B. MOTOR AND BELT	3
C. 润滑	C. LUBRICATION OIL	4
D. 润滑油的更换	D. OIL CHANGE	5
E. 滤油器的更换	E. REPLACING OIL FILTER	5
F. 换针方式	F. HOW TO REPLACE THE NEEDLES	6
G. 穿线方式	G. THREADING	6
H. 拉线松紧度的调整	H. ADJUSTING THREAD TENSION	8
I. 上网线栓线杆的调整	I. ADJUSTING SPREADER THREAD TAKE-UP	8
J. 缝目长度的调整	J. ADJUSTING STITCHLENGTH	9
K.押脚压力长度的调整	K. ADJUSTING THE PRESSURE OF PRESSER FOOT	9
二、调整说明	ADJUSTMENT GUIDE	
A. 针棒高度之调整	A. THE HEIGHT OF NEEDLE BAR	10
B. 针与勾针位置之说明	B. POSITION OF NEEDLE AND LOOPER	11
C. 针与勾针的时位关系调整	C. TIMING OF NEEDLE AND LOOPER	12
D. 顶针片之调整	D. ADJUSTING THE NEEDLE GUARD	15
E. 上勾针位置的调整	E. ADJUSTING THE POSITION OF SPREADER	15
F. 押脚提升高度的调整	F.. ADJUSTING THE HEIGHT OF PRESSER FOOT	16
G. 送料具高度的调整	G. ADJUSTING THE HEIGHT OF FEED DOG	17
H. 勾针控线组之调整	H. ADJUSTING LOOPER THREAD TAKE-UP	18
三、简易故障排除	MAINTENANCE GUIDE	
A. 跳针	A. SKIPPED STITCH	19
B. 杂音或车缝大声	B. NOISE OR LOUDLY SEAMING	21
C. 漏油	C. LEAKING	23
四、桌板图	TABLE TOP	
A. 车台安装位置图（电子马达）	A. TABLE TOP INSTALLATION (SERVO MOTOR)	25
B. 车台安装位置图(普通马达)	B. TABLE TOP INSTALLATION (CLUTCH MOTOR)	26
五、零件图	PARTS BOOK	27

一、使用说明 OPERATION GUIDE

A. 安装：

1. 请依本机配件盒内所附之正确桌板尺寸裁制图，裁制桌板。

2. 再依序安装防震衬垫、底座固定板及其他附件。

*注意：

(1) 防震衬垫及底座固定板切勿锁死。与锁紧后仍要保留些许的弹性，以利减震。另外，衬垫及底座固定板的一边要紧临皮带孔。（图1）

(2) 在安装脚架时，前脚请比后脚稍微调高2cm。（图2）

A. INSTALLATION:

1. Before installing machine, please refer to table cut-out drawing. To cut-out the table correctly.

2. According to the sequence of installation, to fix quake-proof sheet,base-fixed plate and others attachment.

*Remarks:

(1) Don't screw the quake-proof sheet and base-fixed plate too hard ,please keep some elasticity for quake-proof.In additional,one of their side must be closed the belt hole.(Fig.1)

(2) When installing foot stand, the front feet must be 2cm higher than rear feet.(Fig.2)

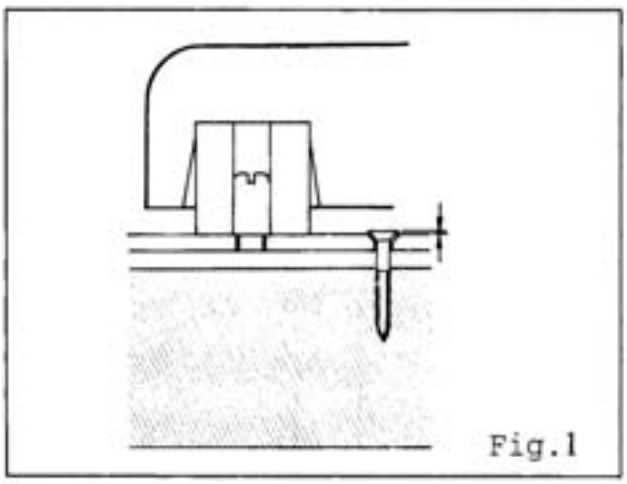
Fig.1

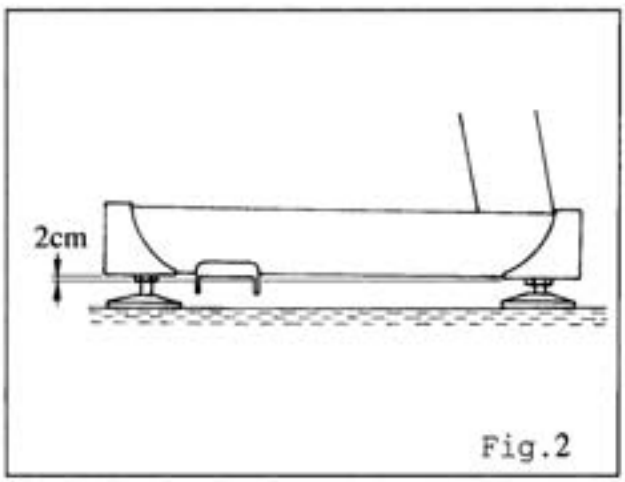

Fig.2

3. 马达之转向为顺时针方向，皮带之松紧度以用手指向内压下2cm为一般标准，同时为了安全起见请将皮带盖盖上（图3）

3. Be sure that the motor turning direction is clockwise, and the motor belt tension can be pressed with finger inward 2cm.For safety reason, please fasten the belt cover. (Fig.3)

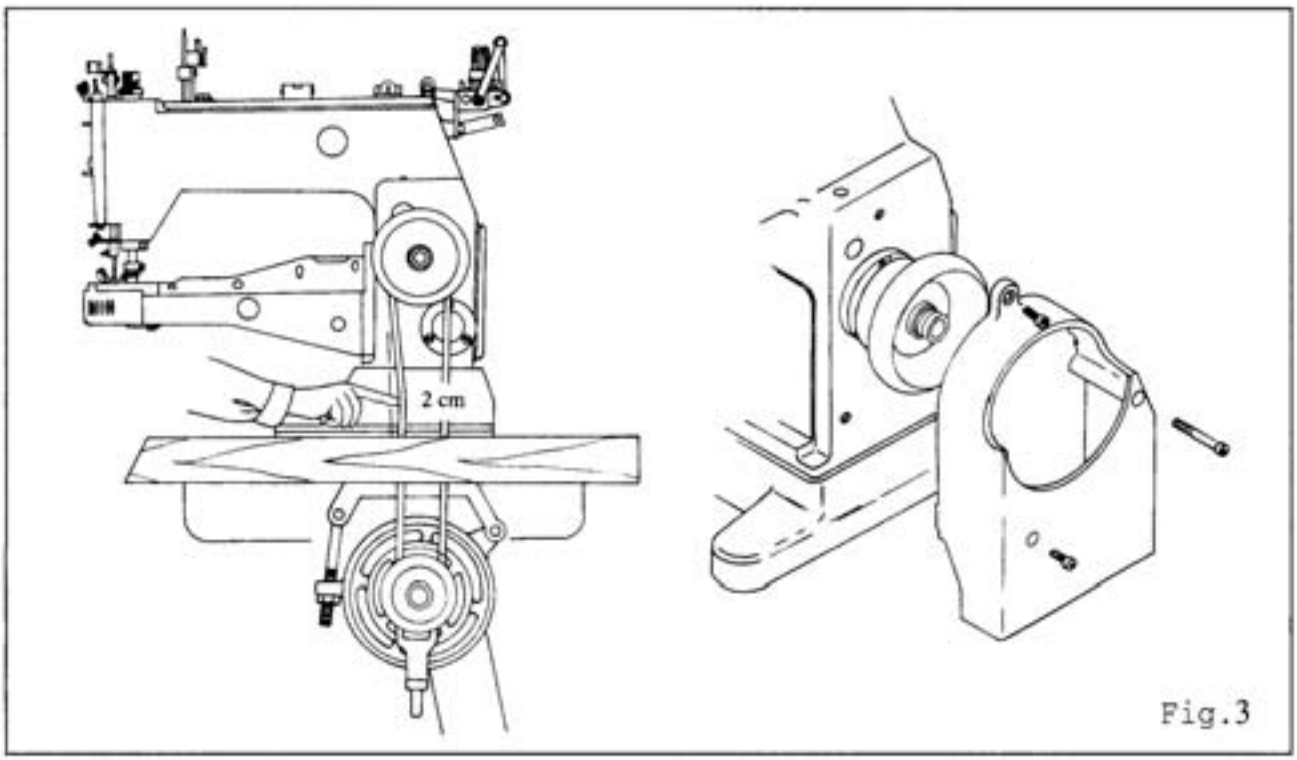

Fig.3

4. 皮带轮与转速请参照表1。

4. Regarding machine speed and motor pulley diameter, please refer to table 1.

Table 1 (表1)

MACHINE SPEED (S.P.M.) 转速/分	MOTOR PULLEY OUTER DIAMETER(MM)			MOTOR BELT V-BELT, M-TYPE (CLUTCH MOTOR)
	60Hz	50Hz	NEEDLE POSITIONER (定位马达)	
3,500	75	90	70	38"
3,000	65	80	60	36"
2,700	55	70	50	35"

B. 马达与皮带：

1. 请依照表1所指示之规格安装马达，并使用M番之V型皮带。

2. 马达位置的安装请安装于机台之正下方，马达驱动轮必须与机器皮带轮呈垂直。（图4）

B. MOTOR AND BELT:

1. Please follow the table 1 to install motor. Use a V belt of M type.

2. The center of both motor's and machine's pulley must be aligned in vertically when install the motor. (Fig4)

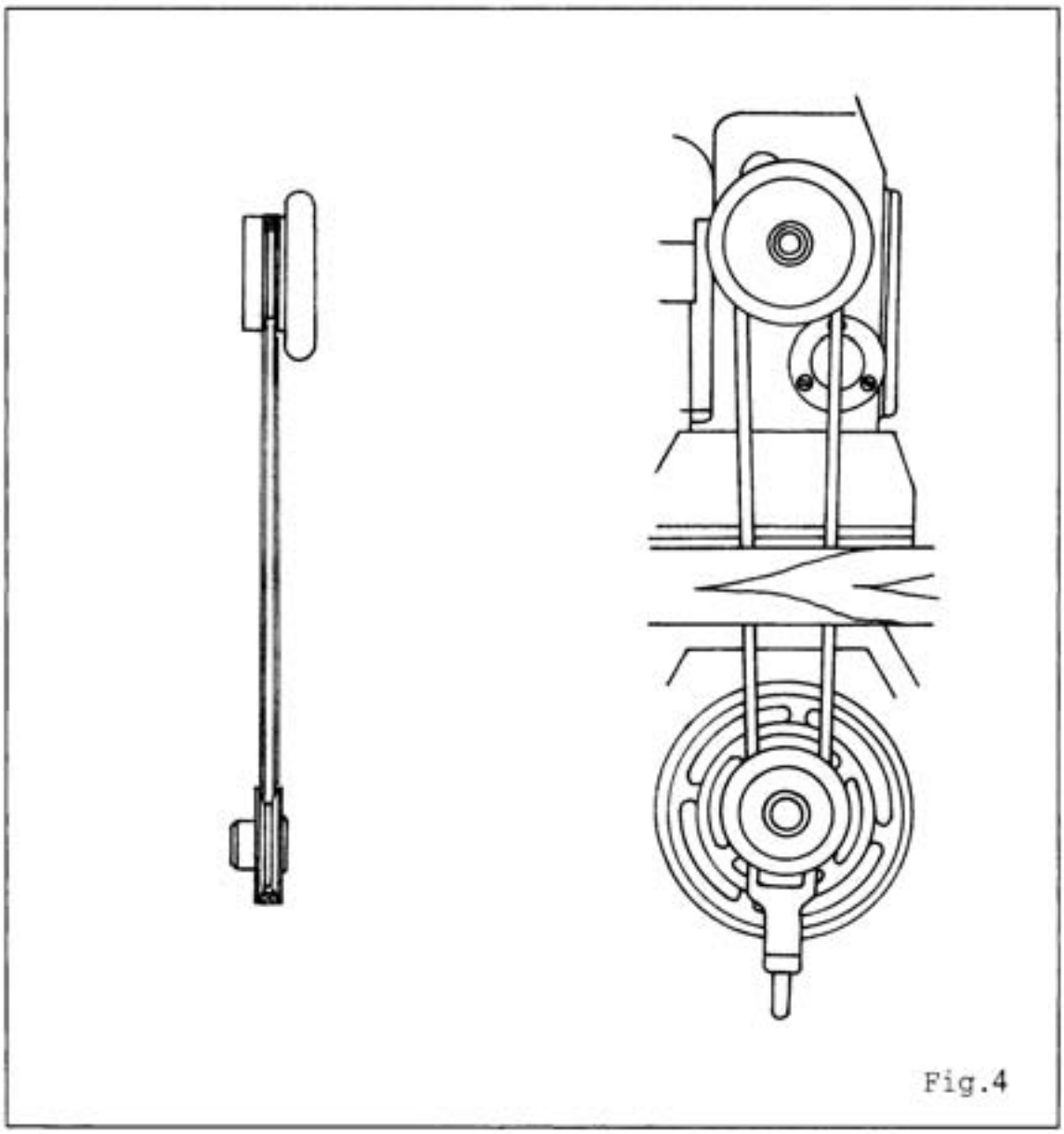

Fig.4

C. 润滑：

1. 请选用与MOBIL#10同级之润滑油。

2. 在新机使用前请先注入润滑油。旋开顶盖上的喷油检视盖（A),将油缓缓注入机器中，待测量满至油标指示窗（B)上下线之间即可。（图5）

3. 于每天开机操作时，请先检查喷油状态是否正常，且注意油标是否低于指示窗之下限，若低于下限请随时补充新油。

C. LUBRICATION OIL:

1. Please use MOBIL #10 or it's equivalent.

2. Before operating the new machine,to remove Oil Sight Window (A) and fill the oil slowly until the oil level reaches between lines H and L of Oil Sight Gauge (B). (Fig 5)

3. When you begin operating the machine in everyday, please check whether all the lubricating system is at normal condition. If oil level is lower than line L of Oil Sight Gauge, please supply oil.

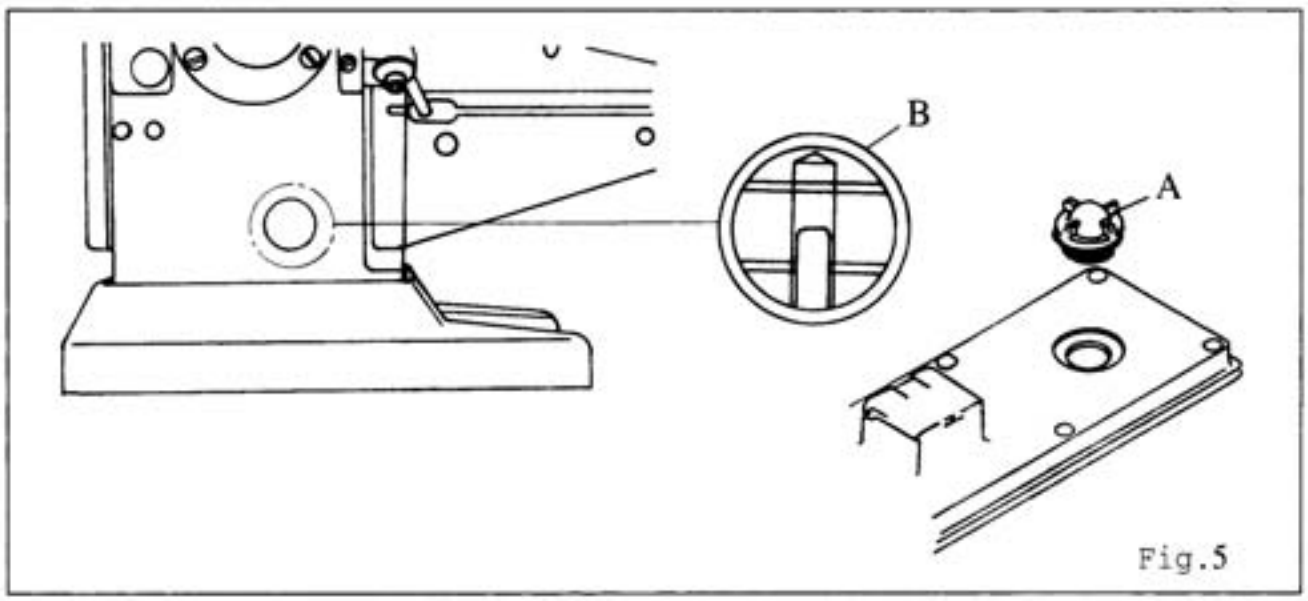

Fig.5

G. 润滑油的更换：

1. 将放油螺丝(A)松开,使油槽内的旧油完全排出后,再将放油螺丝锁紧(图6)再依C-2的步骤注入新油。

2. 为延长本机的使用寿命，请于开始使用的一个月内更换第一次的新油，以后约每6个月更换新油一次。

D. OIL CHANGE:

1. Remove screw (A) and drain all the oil from the tank. After draining, tighten screw (A) without fail. Please refer to C-2 for replenishing oil. (Fig 6)

2. For the long life of machine,change lubrication oil completely after one month of intial operation. After that, change lubrication oil every six months.

E. 滤油器的更换：

本机装有滤油器，新机使用一个月后必须更换新品。此后，仅需每6个月更换一次。（图7）

E. REPLACING OIL FILTER:

This machine is equipped with an Oil Filter, to change the Oil Filter after one month of intinal operation. After that, please change Oil Filter every six months. (Fig 7)

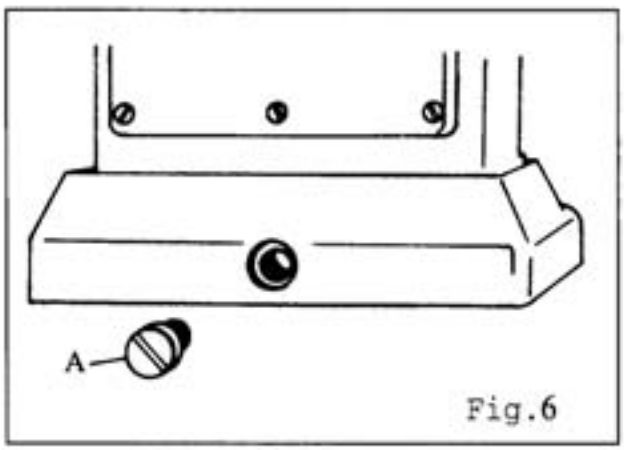

Fig.6

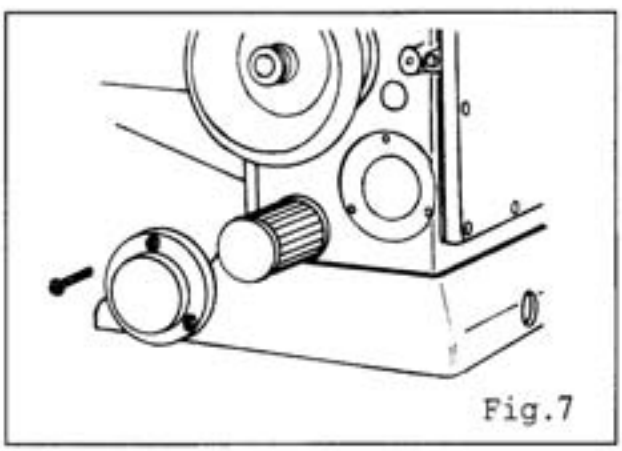
Fig.7

F. 换针方式：

1. 请选用TVx7,11番的针或其他相同规格之针。

2. 旋开锁针螺丝（A),并取下旧针，将新针插至针座之最顶端，且使长沟面向自已。（图8）

3. 重新将锁针螺丝锁紧(A)。

F. HOW TO REPLACE THE NEEDLES:

1. Please use the TVx7 of Organ's needle or it's equivalent.

2. Loosen screw (A), then pull out the used needles. Insert the new needles into the holder holes as far as they can go, and let the long groove of the needle face you. (Fig 8)

3. Fasten screw (A).

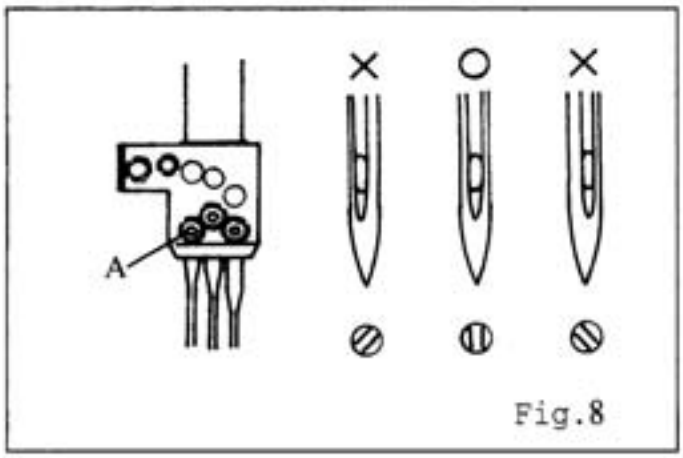

Fig.8

G. 穿线方式：

1. 请按照图中所指示的穿线方式,正确穿线。若穿线方式错误，将会引起断线、跳针或车缝不平坦等现象。（图9）

G. THREADING:

1. Threading should be made correctly. Refering to the illustration. (Fig 9) Wrong threading may cause thread breaking, skipping stitch or puckering.

2. A.B.C.....击针线，D.....上网线
E.....勾针线。

3. 若用三针车缝，穿线方式如图所示。若用二针车缝，穿线方式相同，所不同者，仅是击针线穿二针而已。（图9）

2. A. B. C.....needle thread, D.....
top cover thread, E.....looper thread.

3. The threading for three needles machine is shown in the illustration below. For two needles machine, thrading is the same except two needles threaded. (Fig 9)

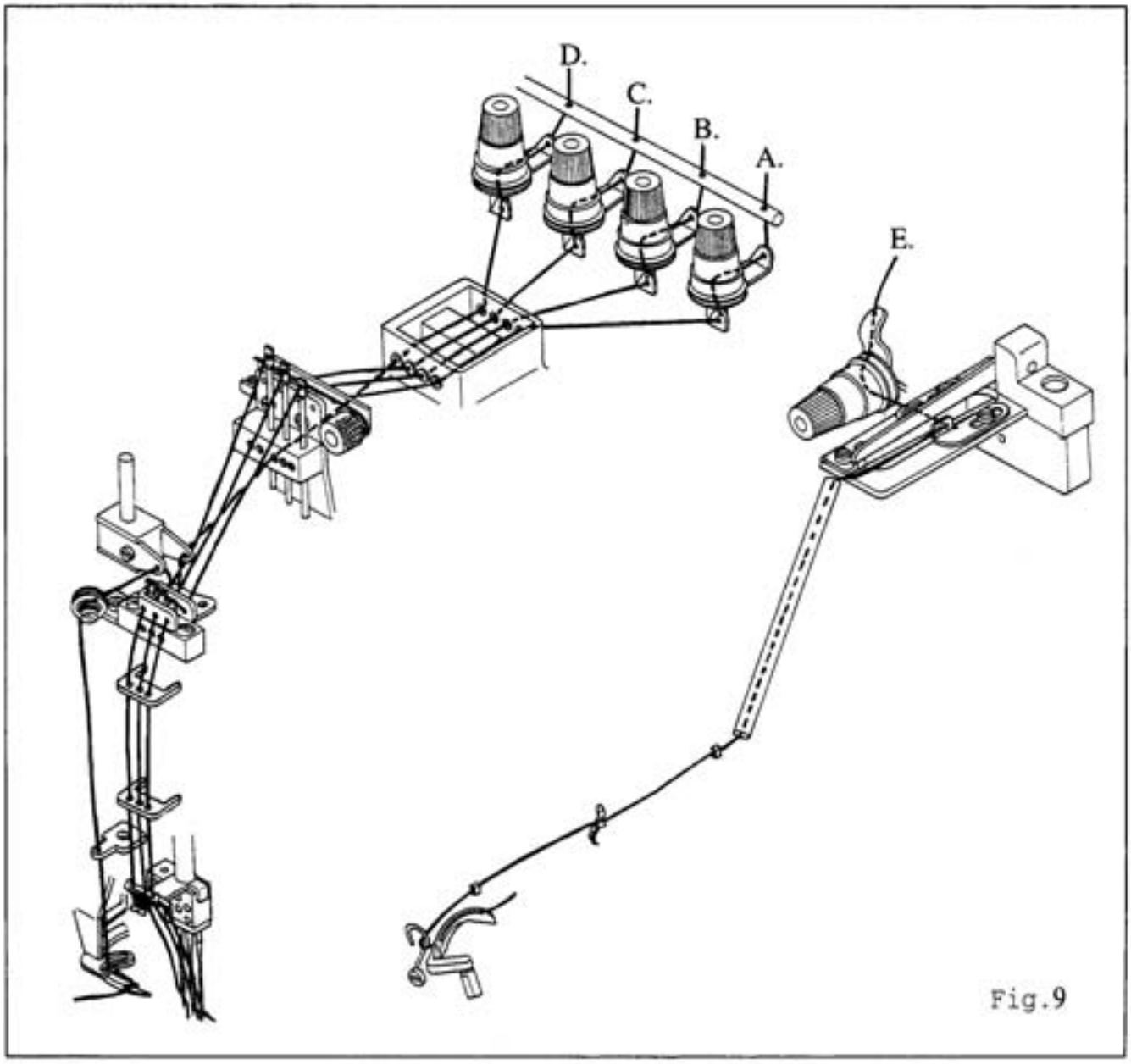

Fig.9

H. 拉线松紧度的调整：

1. 拉线的强弱必须根据车缝的布料厚薄及线与针距等的不同而做调整。

2. 将针线控制钮顺时针方向旋转时线愈紧，反之愈松。（图10）

H. ADJUSTING THREAD TENSION:

1. The tensions of thread should be adjusted for according to what types and thicknesses of fabrics being sewed; what types of threads being used; how mang stitches you need in one inch.

2. Turning the Thread Tension Knob clock-wise, thread will be tighter. (Fig 10) On the contrary, turning it counterclockwise will be looser.

I. 上网线栓线杆的调整：

除了针线控线钮可调整上网线之松紧外，上网线控线杆亦可用来调整上网线之松紧，控线杆升愈高则线愈松，愈低则线愈紧。（图11）

I. ADJUSTING SPREADER THREAD TAKE-UP:

The Spreader Thread Take-Up could adjust the tension of top-cover thread except the Thread Tension Knob. When The Spreader Thread Take-Up move upward, the tension of top-cover thread will be looser.If the Spreader Thread Take-Up move downward, the tension of top-cover thread will be tighter. (Fig 11)

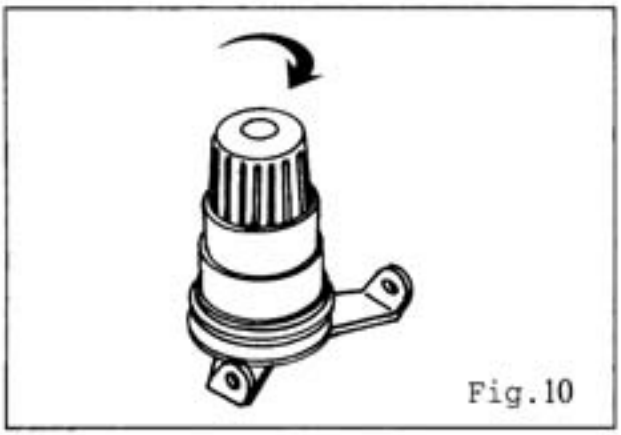
Fig.10

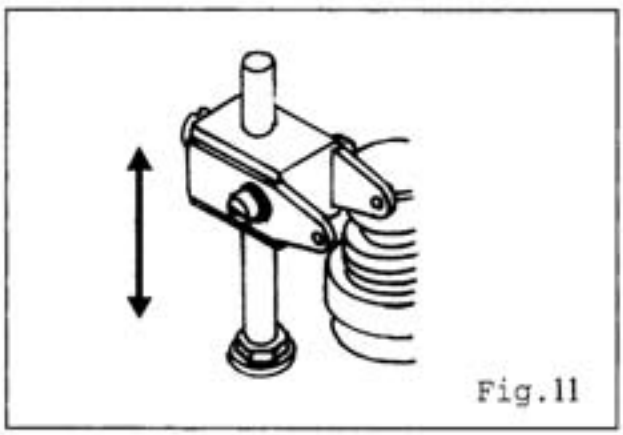
Fig.11

J. 缝目长度的调整：

1. 本机的标准缝目为最粗针1英寸7针,最细针1英寸14针,采用无阶段式调整方式。

2. 请将止油胶盖(A)打开，用本机所附之10mm梅花扳手予以调整。将缝目调整螺丝放松往下降，锁紧则缝目愈细，往上升锁紧则缝目愈粗。（图12-1）

K. 押脚压力强度的调整：

1. 若要求布料推送顺畅且缝合完美押脚压力应尽量轻些。

2. 松开螺母(A),转动螺丝(B),调整其适当压力后再锁紧螺母(A)。(图13)

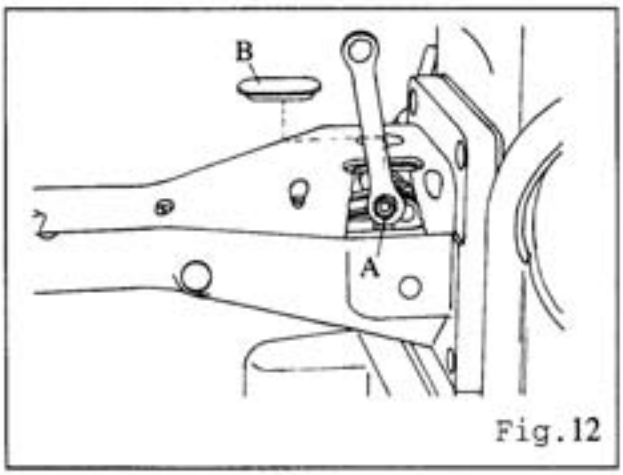

Fig.12

J. ADJUSTING STITCH LENGTH:

1. The standard stitch length can be adjusted variably in range from min. 7 stitches to max. 14 stitches per inch.

2. Please take-out Rubber Plug (B)and use 10mm ring spanner to adjust the stitch length on the arm.
Loosen nut (A), move the indicator downward to decrease the stitch length, move the indicator upward to increase the switch length. (Fig 12)

K. ADJUSTING THE PRESSURE OF PRESSER FOOT:

1. Pressure of Presser Foot should be as weak as possible, so that cloth can be feeded and sewed smoothly.

2. To increase the pressure of Presser Foot, to turn Adjusting Screw (B) clockwise after loosening Lock Nut (A) and to decrease the pressure turn Screw (B) counterclockwise. (Fig 13).

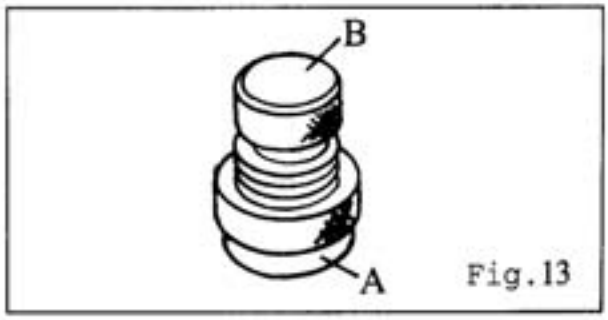

Fig.13

二、调整说明 ADJUSTMENT GUIDE

A. 针棒高度之调整：

1. 先将针棒升到最高处，此时最长针的针尖与针板的距离为10.2mm~10.4mm。（图14）

2. 若需调整时，请先打开机头前盖之止油胶盖，放松针棒连杆(A)上的螺丝(B),上下调整针棒的高度后再固定之。（图15）

*注意：

(1) 针必须完全装入针镩孔最顶端。

(2) 经过针棒高度调整后，必须要确定每一根针皆通过针板的针孔正中央，不可以偏斜，且三根针需成平行。（图16）

A. THE HEIGHT OF NEEDLE BAR:

1. Please lift the Needle Bar to the highest position. During this time, the standard height between the longest right needle point and the Needle Plate are 10.2 ~ 10.4mm. (Fig 14).

2. If you want to adjust the height of Needle Bar, please remove the rubber plug of front cover and loose the screw(B) on Needle Bar Rod(A).
Adjust the Needle Bar up or down to require height and fix the screw (A). (Fig 15)

* Remarks:

(1) Be sure insert the needle into the Needle Holder as far as it can go.

(2) After the Needle Bar adjustment, make sure that every needle passes through the center of the needle hole on the Needle Plate. Besides, the three needles must be in parallel and the gap must be even. (Fig 16)

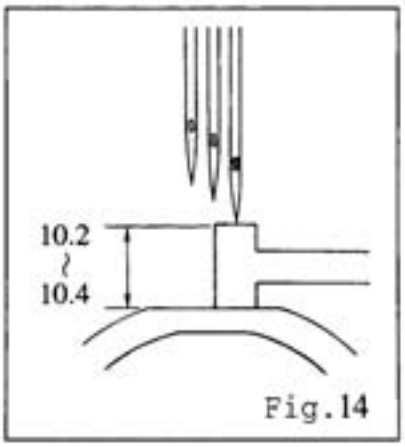

Fig.14

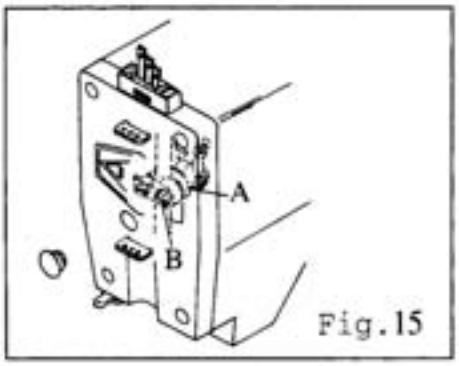

Fig.15

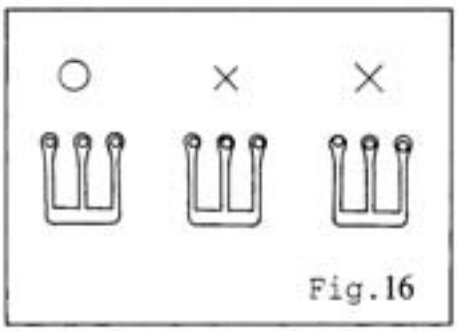

Fig.16

B. 针与勾针位置之说明 ：

1. 将勾针固定于勾针座上,勾针约向右倾斜0.7mm~0.8mm。（图17）

2. 再将针棒降至最低点，此时勾针与最左针之距离为3.7mm~3.9mm（图18）

B. POSITION OF NEEDLE AND LOOPER:

1. Fix the Looper on the Looper Holer,make sure Looper deflect to the right about 0.7mm~0.8mm. (Fig 17)

2. Please move the Needle Bar to the lowest position, setting the distance between the point of Looper and shortest left needle is 3.7mm~3.9mm.(Fig18)

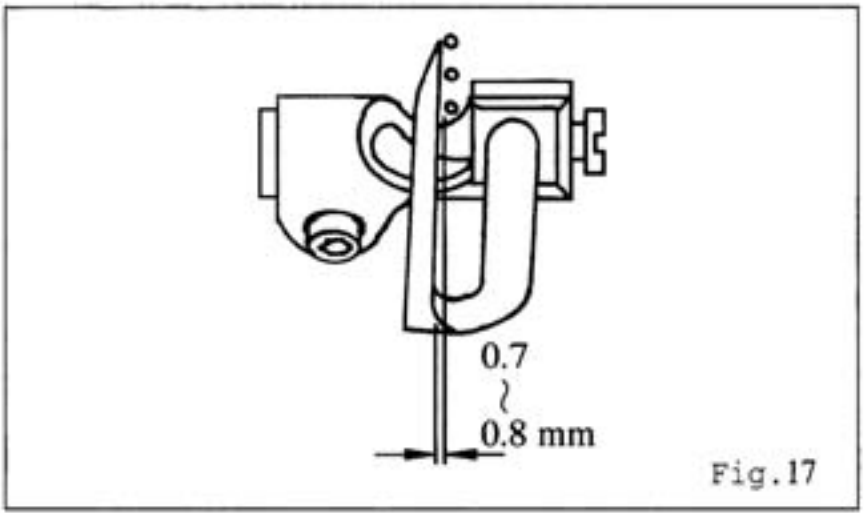

Fig.17

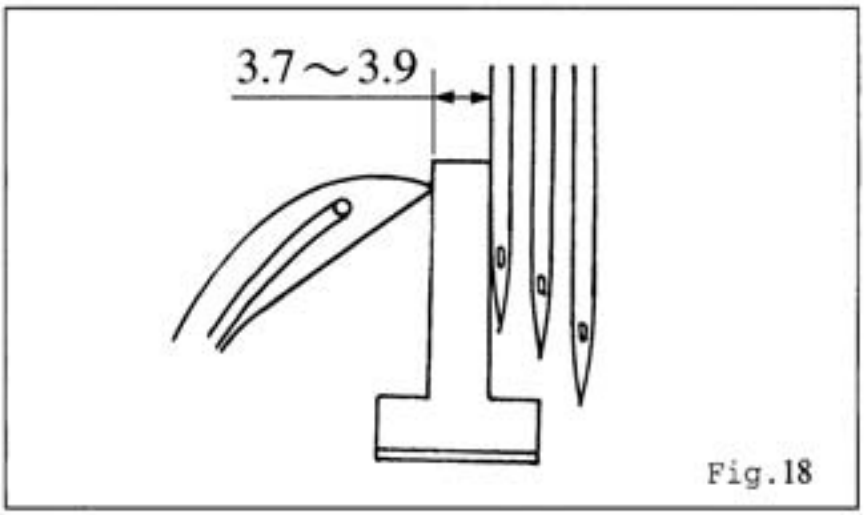

Fig.18

C. 针与勾针的时位关系调整：

1. 当勾针前进通过左针时,勾针针尖与针的距离为0.01mm。（图19）

2. 当勾针前进通过右针超过0.1mm时，勾针底端与针孔上沿接触(图20),而此时勾针与针的间隙为0.2mm。（图20）

C. TIMING OF NEEDLE AND LOOPER:

1. When the tip of Looper meets the left needle,the clearance between them should be 0.01mm. (Fig 19)

2. When the tip of Looper passes behind the right needle over 0.1mm, the bottom of Lopper hole touch with the top of right needle hole, the clearcance between them should be 0.2mm. (Fig 20)

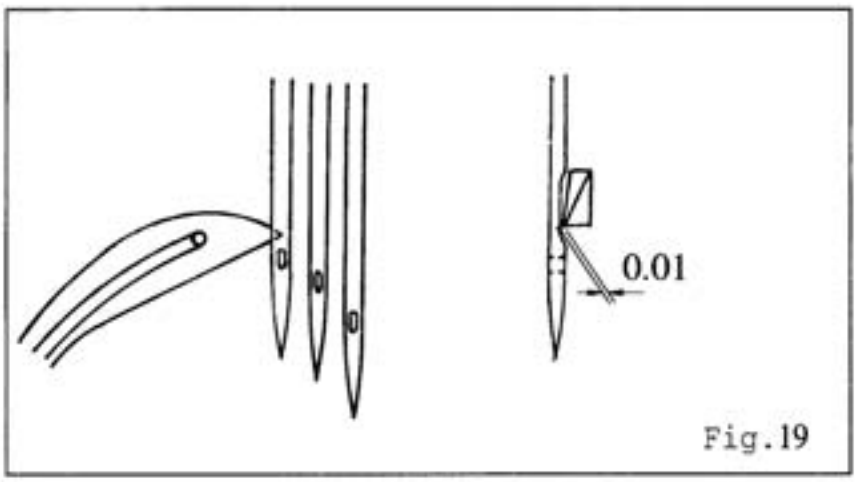

Fig.19

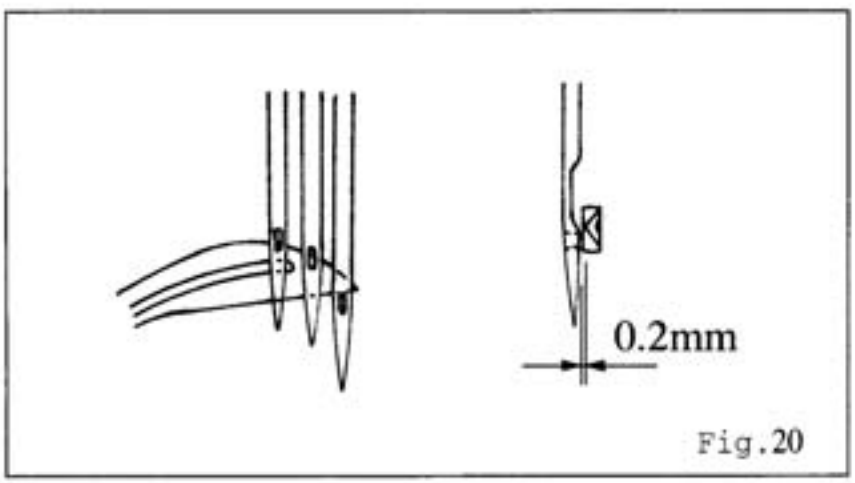

Fig.20

3. 当勾针退后时，右针必须插到勾针斜面棱线往上1/4处。（图21）

*注意：

松开下勾针前后移动控制杆上之螺母(A)，将控制杆上、下调动，即可调整击针插到勾针斜面的厚、薄。(图22)

3. When the Looper reversed, the right needle stick on 1/4 be high of the Looper's slant edge. (Fig 21)

*Remark:

Loosen the nut (A) of Looper Front-Rear Contral Shaft,move the Shaft upward or downward,it could adjust the needle to stick on the Looper thicker or thiner. (Fig 22)

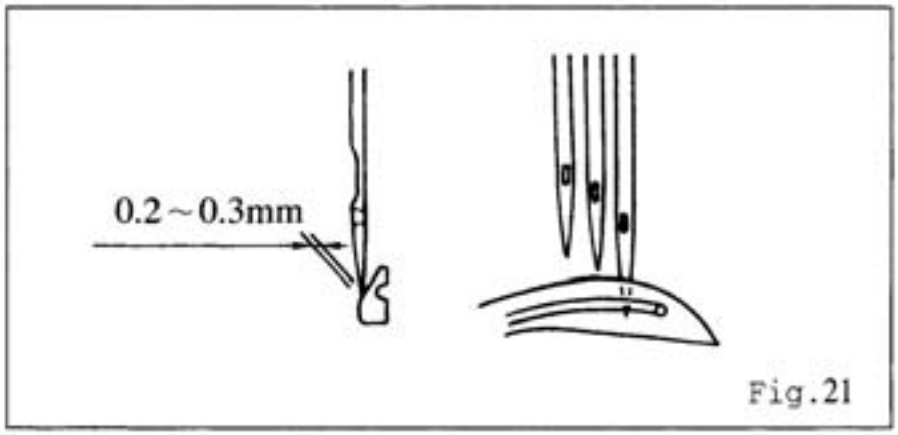

Fig.21

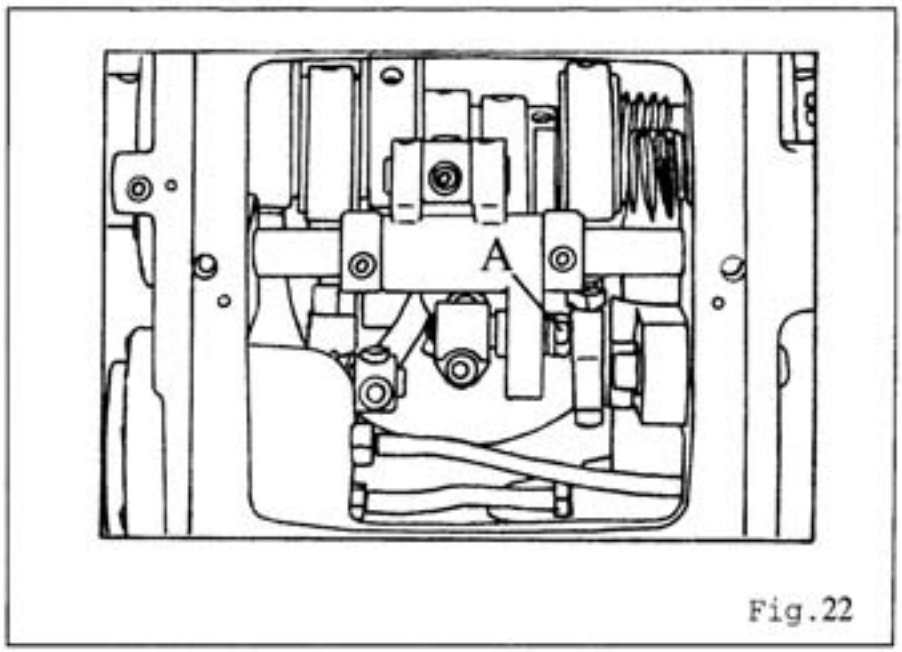

Fig.22

4. 当勾针往后退，勾针孔经过右针时，勾针针孔须与右斜针孔对齐。(图23)

* 注意：

放松勾针左右移动时间凸轮(B)上的三颗螺丝，往前、后移动，即可调整勾针左、右移动时间的快、慢。(图22-1)

4. When the Looper is returned to pass the right needle,Looper hole aligns with right needle hole. (Fig 23)

*Remark:

Loosen the three screws on the Looper Timing Contral Cam(B),move the Cam toward or backward, it could adjust the timing of Looper faster or slower. (Fig 22-1)

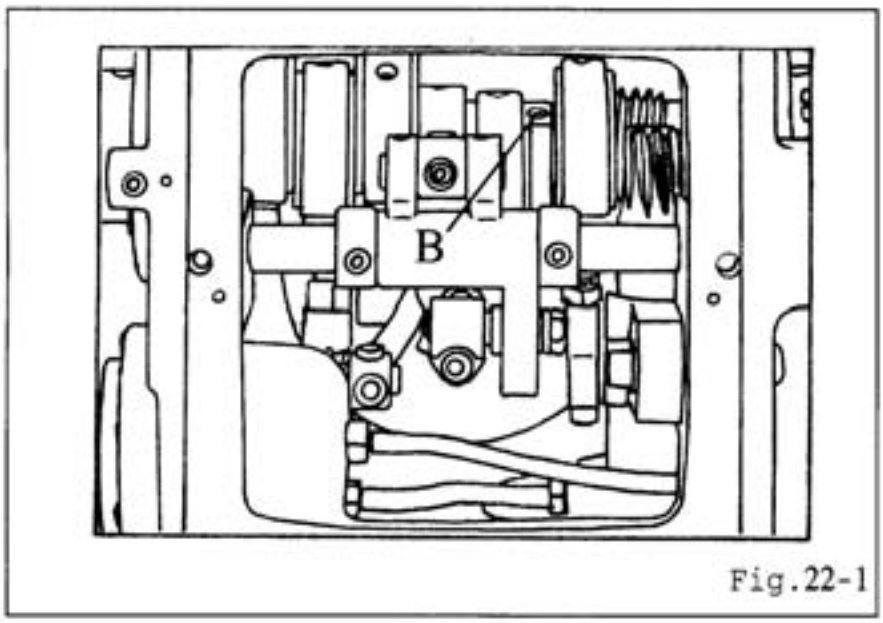

Fig.22-1

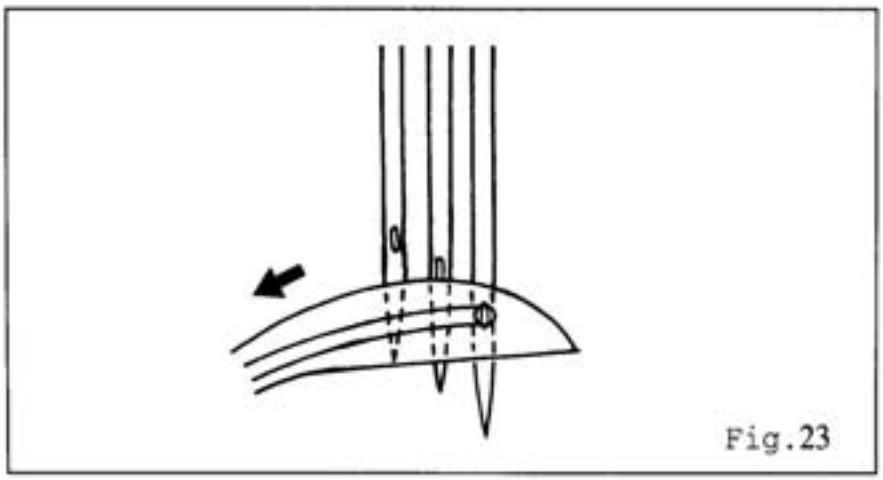
Fig.23

D. 顶针片之调整：

当送料具移动到最前端时，顶针片必须维持水平，且顶针片尖端与左针的间隙应为0.05mm。（图24）

D. ADJUSTING THE NEEDLE GUARD:

When the Feed Dog move to the frontest position, the Needle Guard should remain horizontal. Besides, the clearance between the tip of Needle Guard and left needle should be 0.05 mm. (Fig 24)

E. 上勾针位置的调整：

1. 把针棒降到最低，此时上网线导线片(A)与上网线导线板(B)的间隙为1mm,而导线板(B)与上勾针的间隙为0.5mm，且上网线导片(A)的导孔与上网线导线板(B)的长沟、上勾针针尖的弯处，三者必须对齐。（图25）

E. ADJUSTING THE POSITION OF SPREADER:

1. Please move the Needle Bar to its lowest position, adjust the clearance between Thread Guide Pin (A)and Thread Guide Plate (B) to 1mm. In the meantimes, adjust a clearance between Thread Guide Plate (B) and Spreader to 0.5mm.
   Please make sure that the concavity of the Spreader align with the thread hole of Guide Pin(A) and the groove of Guide Plate (B). (Fig 25)

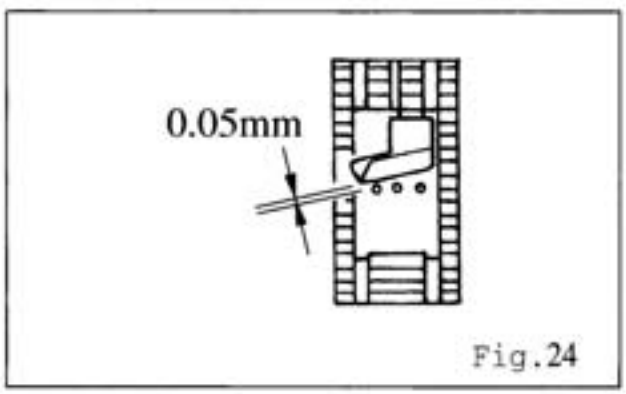

Fig.24

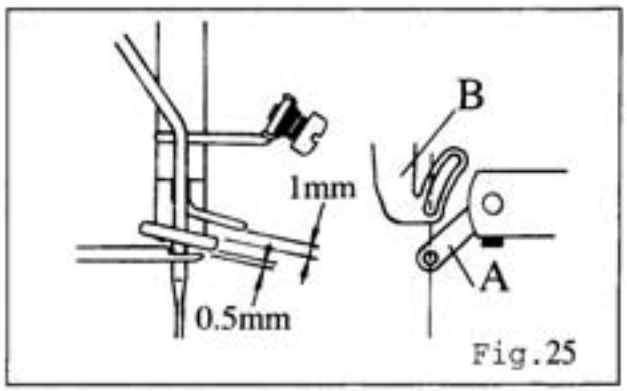

Fig.25

2. 当针棒升至最高时,上勾针针尖前进到最右点,此时,上勾针针尖到右针的间隙为4mm。而当上勾针针尖经过右针时，两者的间隙为0.1mm。（图26）

2. When the Needle Bar lifts to the highest position and the Spreader moves to extreme right, the distance between the right needle and the hook's point of Spreader is 4mm.
When the Spreader passes the right needle, the clearance between the hook's point of Spreader and right needle is 0.1mm. (Fig 26)

F. 押脚提升高度的调整：

欲提升或降低押脚,可先放松螺母(A)再以内六角扳手调整螺丝(B),螺丝(B)调高则押脚高度降低,调低则押脚高度升高。（图27）

*注意：

(1)调高押脚时，请小心不可调得太高以免押脚碰撞上勾针。

(2)在未安装上勾针状态下，押脚也不可以调得太高，以免押脚压不到布料。

F. ADJUSTING THE HEIGHT OF PRESSER FOOT:

If you want to adjust the height of Presser Foot, Loosen the nut (A), turn the screw (B) higher by hexagon wrench to decrease the height. On the contrary, turn the screw (B) lower to icrease the height. (Fig 27)

* Remark:

(1)Please don't adjust the Presser Foot too high. Or, it will hit the Spreader.

(2)Even the Spreader doesn't install. Please don't adjust the Presser Foot too high, it will cause the Presser Foot cann't press the fabric well.

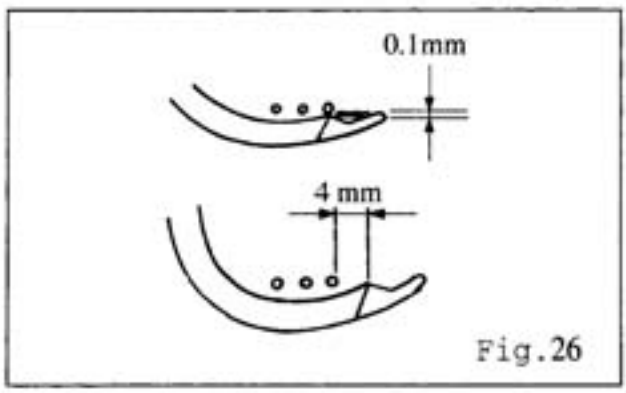

Fig.26

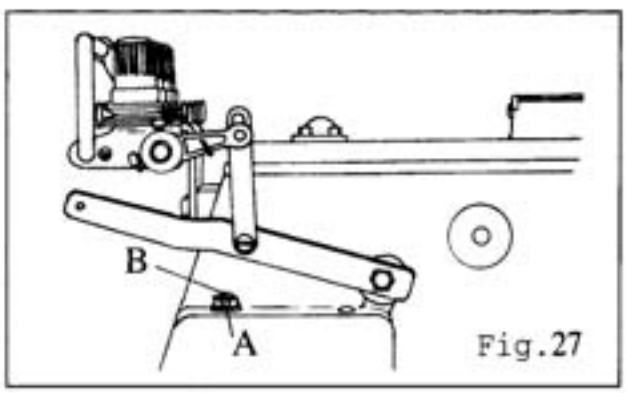

Fig.27

G. 送料具高度的调整：

1. 本机在出厂时，已将送料具高度调在一般位置。若因车缝布料厚薄不同，而欲调整送料具高度时可先将止油胶盖(A)取下，再以螺丝起子转动送料具高度调整螺丝(B)调整之。（图28）

2. 一般送料具高度调整螺丝(B)的沟槽皆在垂直状态，其须时针转15度，为本机最高点，反之，则为最低点。

G. ADJUSTING THE HEIGHT OF FEED DOG:

1. The height of Feed Dog have been adjusted in standard position at the time of shipment. According to the difference thickness of fabric, if you want to adjust the height of Feed Dog, please take-out the Rubber Plug (A) and turn the screw (B) to adjust by flat screw driver. (Fig 28)

2. The groove of screw (B) is in vertical normally. Turn it clockwise to 15 degree is the highest position of Feed Dog. On the contrary, it is the lowest position.

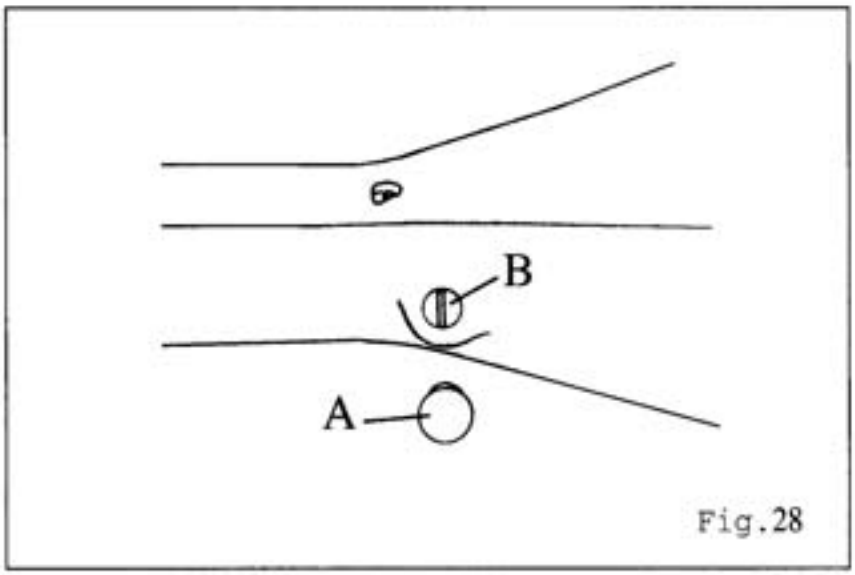

Fig.28

H. 勾针控线组之调整：

1. 当针棒升至最高点,将分线盘(A)的平面部调整呈45度角,且平面边缘轻轻接触穿过的线。分线盘须位于控线组中间沟槽的正中央。

2. 当线穿过勾针底线控制钮及勾针控线组中的导线片(B、C)时要呈一直线，且导线片(B、C)前端的穿线孔要位于控线组的中央，并对准刻痕。（图30）

H. ADJUSTING LOOPER THREAD TAKE-UP:

1. When the Needle Bar lift to the highest positon, the flat of Looper Thread Take-Up (A) touch the thread while it locates at 45 degree. The Looper Thread Take-Up should be sat at middle of channel. (Fig 29)

2. When the thread through the Looper Thread Tension Knob and two Thread Eyelet (B.C) in a line, the front thread hole of Looper Thread Eyelet(B.C) locate at middle of channel and align with the nick. (Fig 30)

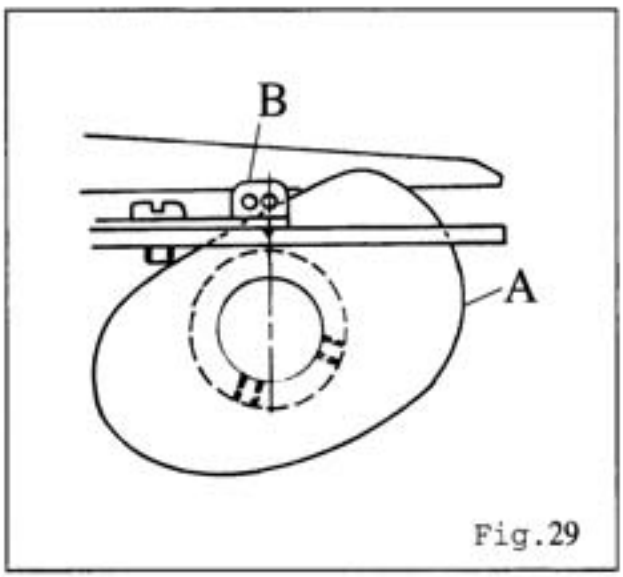

Fig.29

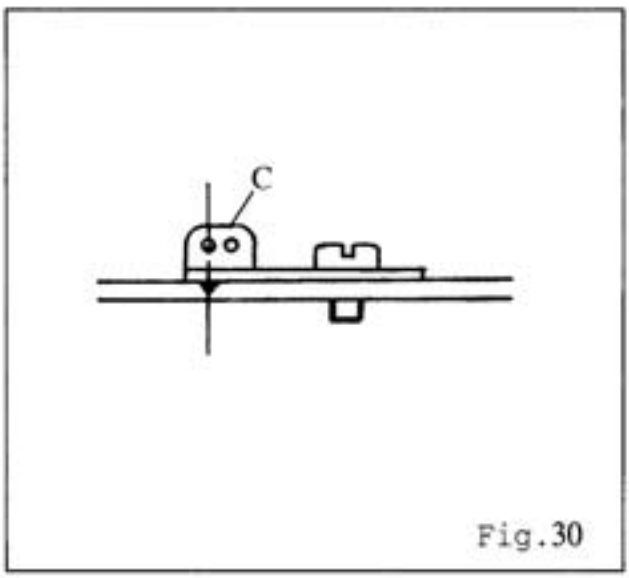

Fig.30

三、简易故障排除

A. 跳针：

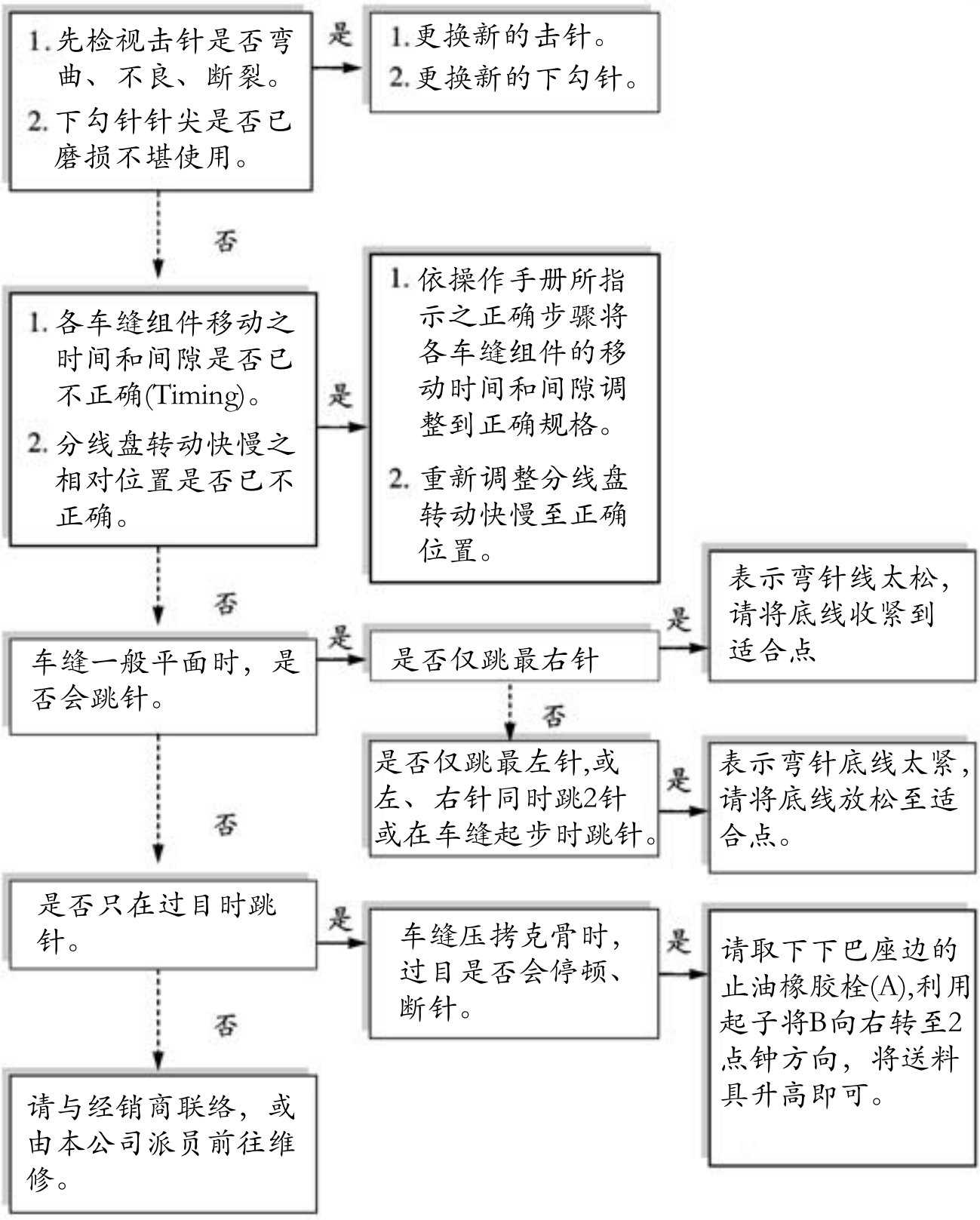
1. 先检视击针是否弯曲、不良、断裂。
2. 下勾针针尖是否已磨损不堪使用。
是
1. 更换新的击针。
2. 更换新的下勾针。
否
1. 各车缝组件移动之时间和间隙是否已不正确(Timing)。
2. 分线盘转动快慢之相对位置是否已不正确。
是
1. 依操作手册所指示之正确步骤将各车缝组件的移动时间和间隙调整到正确规格。
2. 重新调整分线盘转动快慢至正确位置。
否
车缝一般平面时，是否会跳针。
是
是否仅跳最右针
是
表示弯针线太松，请将底线收紧到适合点
否
是否仅跳最左针,或左、右针同时跳2针或在车缝起步时跳针。
是
表示弯针底线太紧，请将底线放松至适合点。
否
是否只在过目时跳针。
是
车缝压拷克骨时，过目是否会停顿、断针。
是
请取下下巴座边的止油橡胶栓(A),利用起子将B向右转至2点钟方向，将送料具升高即可。
否
请与经销商联络，或由本公司派员前往维修。

MAINTENANCE GUIDE

A. SKIPPED STITCH:

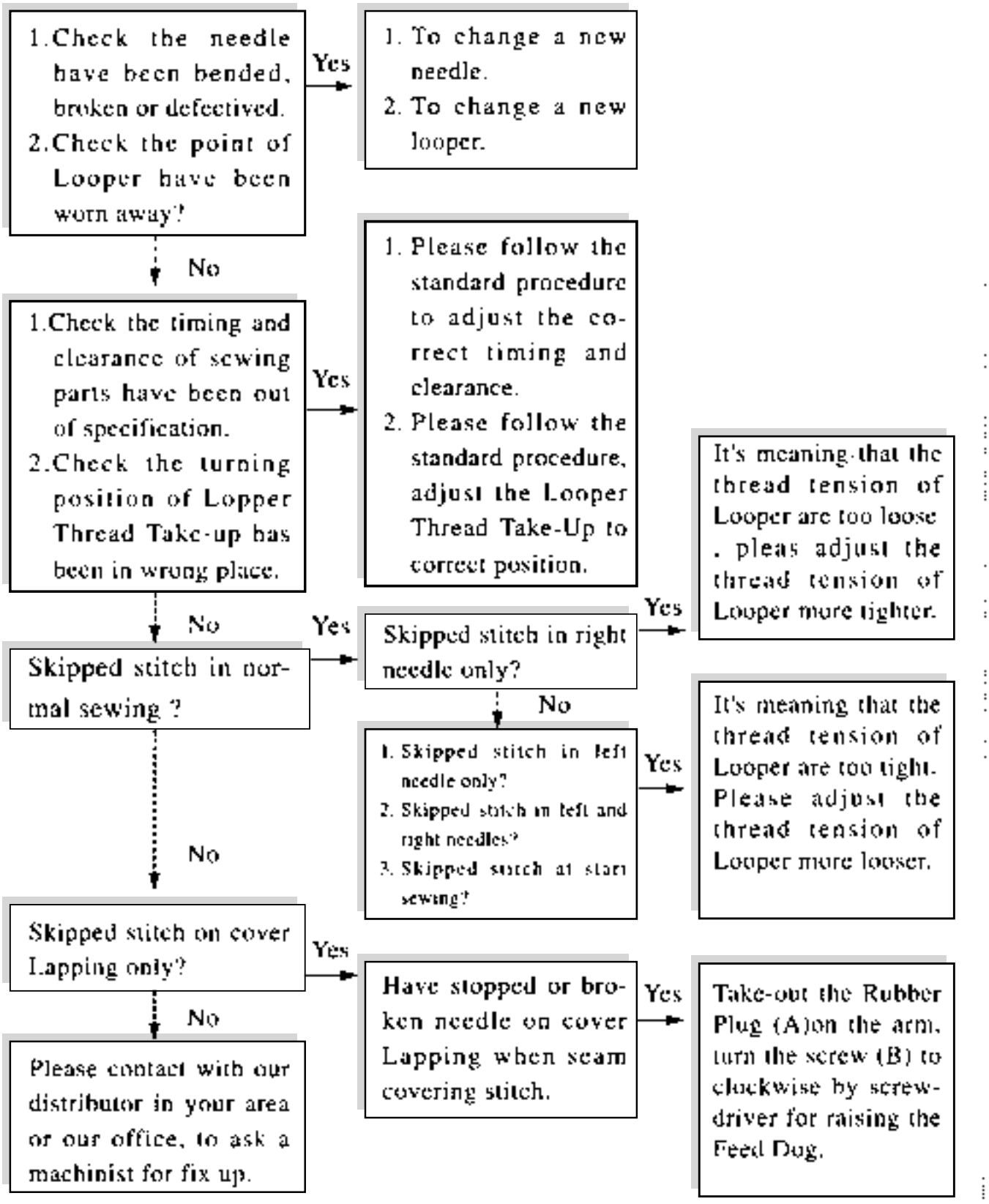

三、简易故障排除

B. 杂音或车缝大声：

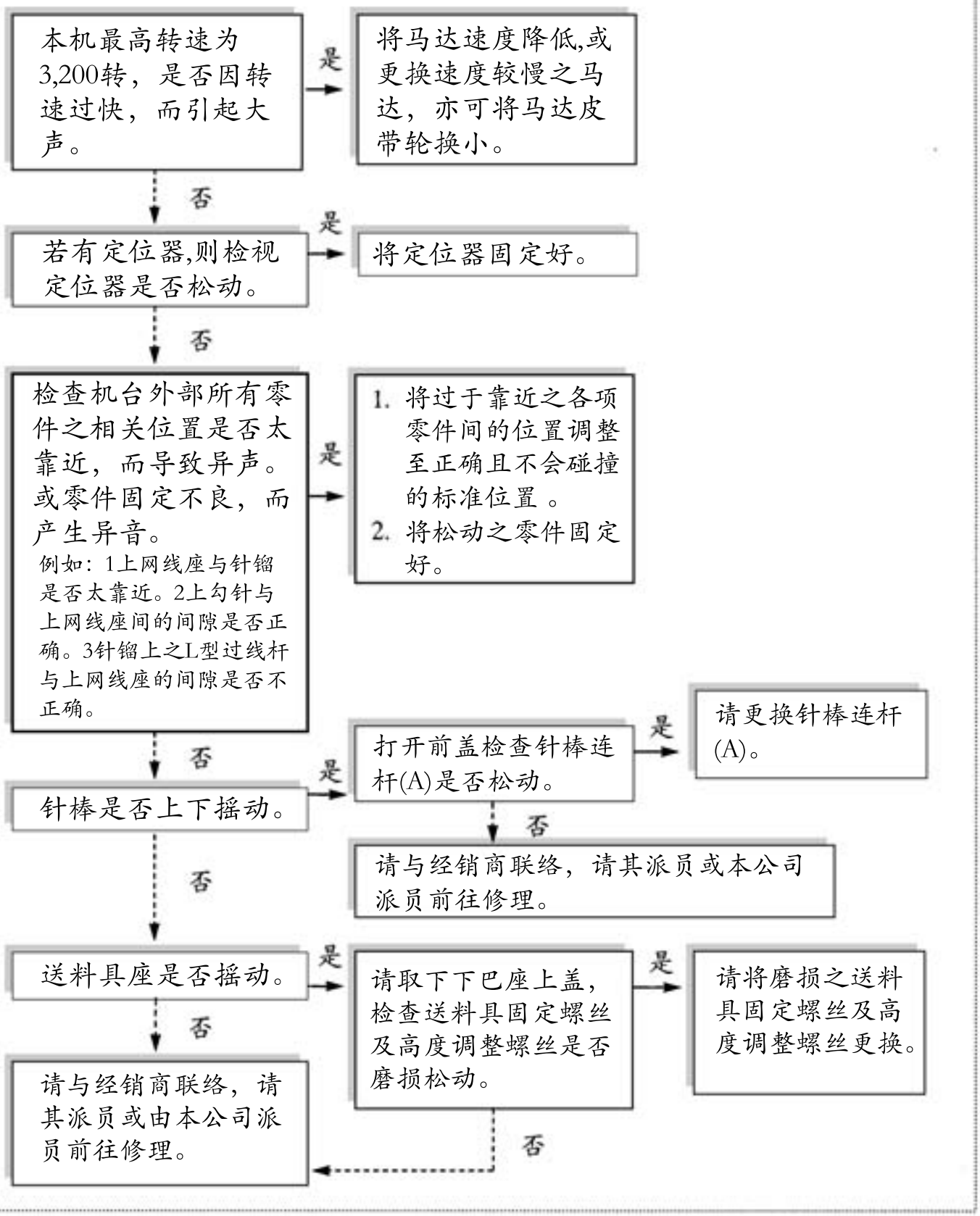

B. NOISE OF LOUDLY SEAMING:

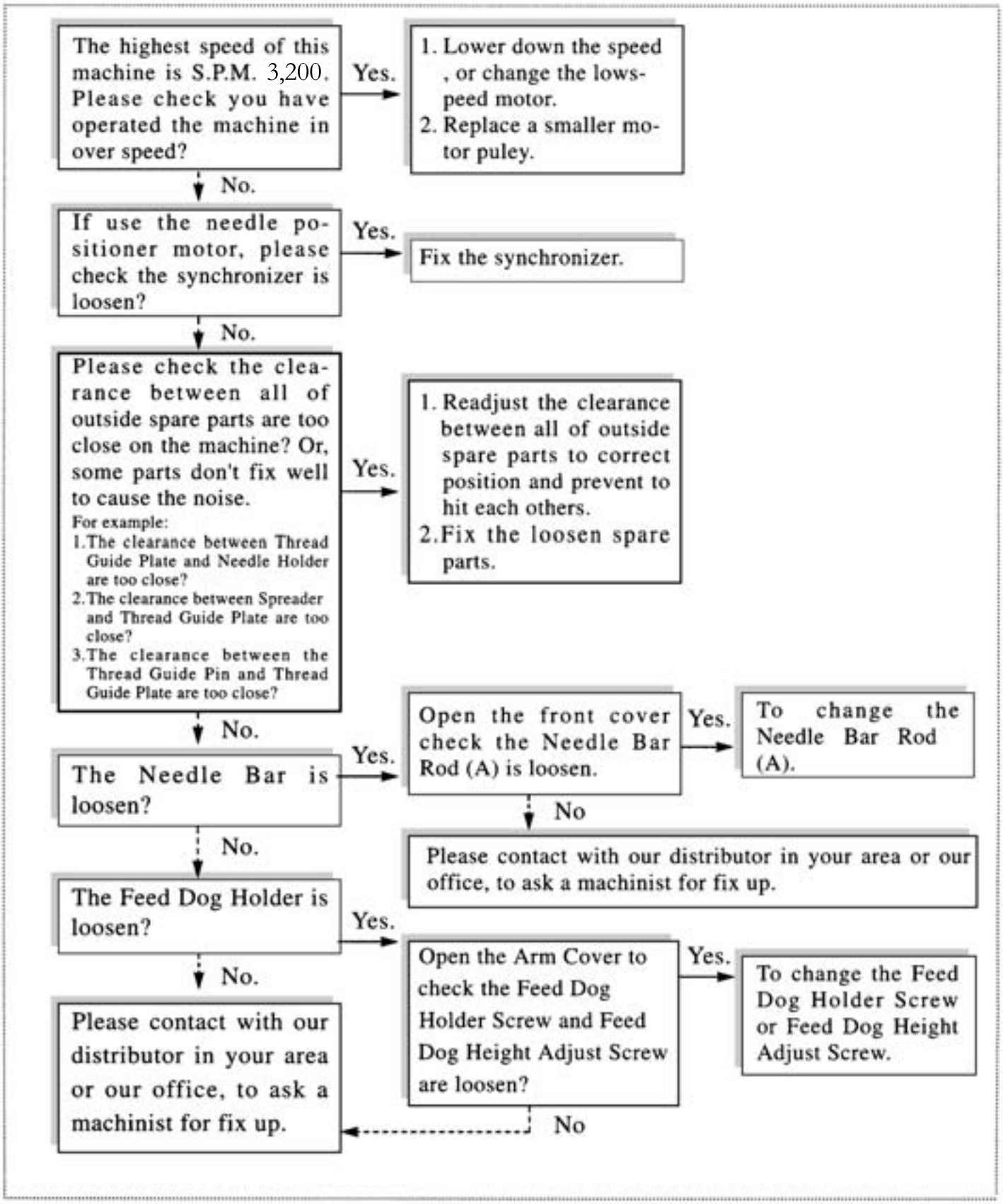

C. 漏油：

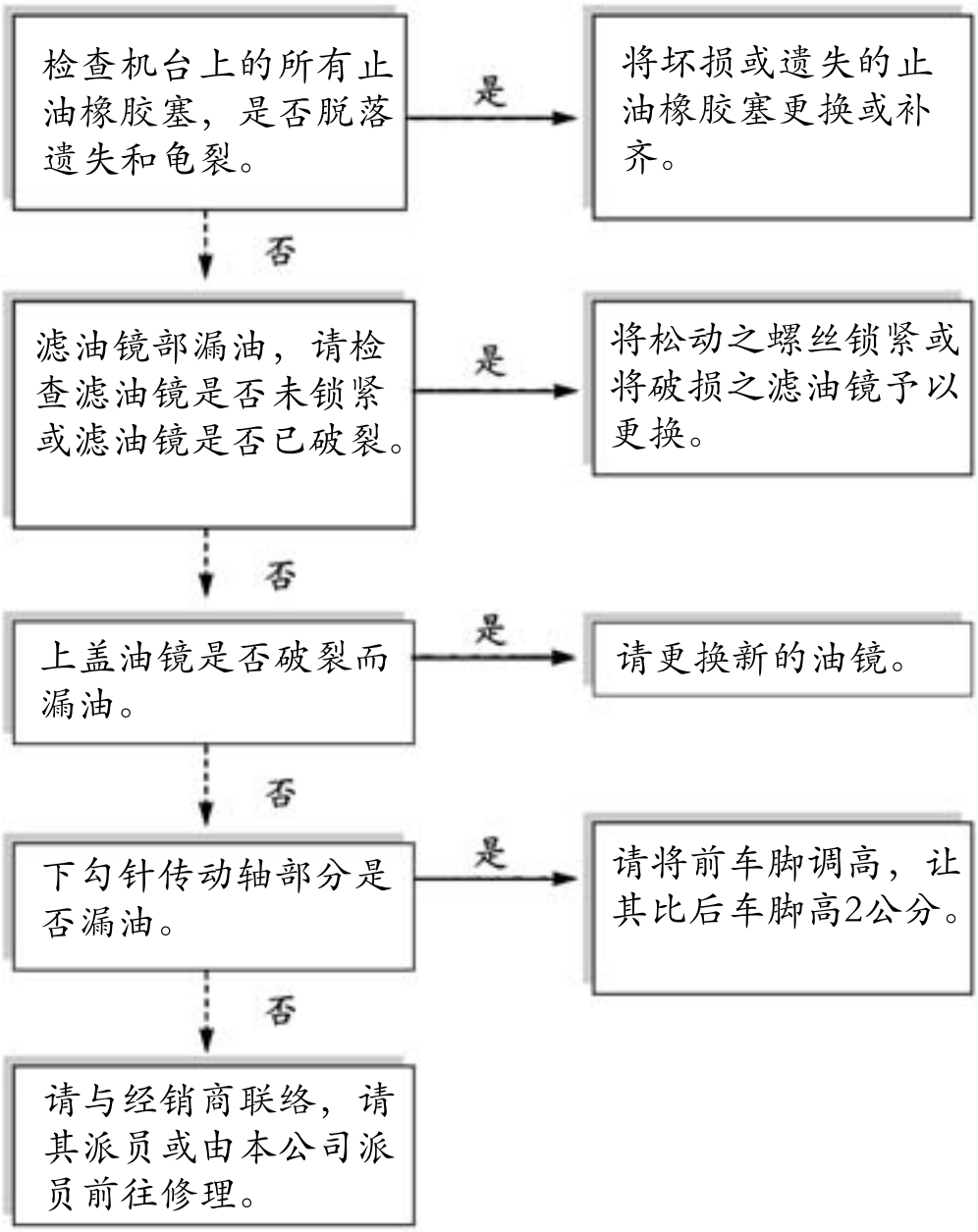
检查机台上的所有止油橡胶塞，是否脱落遗失和龟裂。
是
将坏损或遗失的止油橡胶塞更换或补齐。
否
滤油镜部漏油，请检查滤油镜是否未锁紧或滤油镜是否已破裂。
是
将松动之螺丝锁紧或将破损之滤油镜予以更换。
否
上盖油镜是否破裂而漏油。
是
请更换新的油镜。
否
下勾针传动轴部分是否漏油。
是
请将前车脚调高，让其比后车脚高2公分。
否
请与经销商联络，请其派员或由本公司派员前往修理。

C. LEAKING:

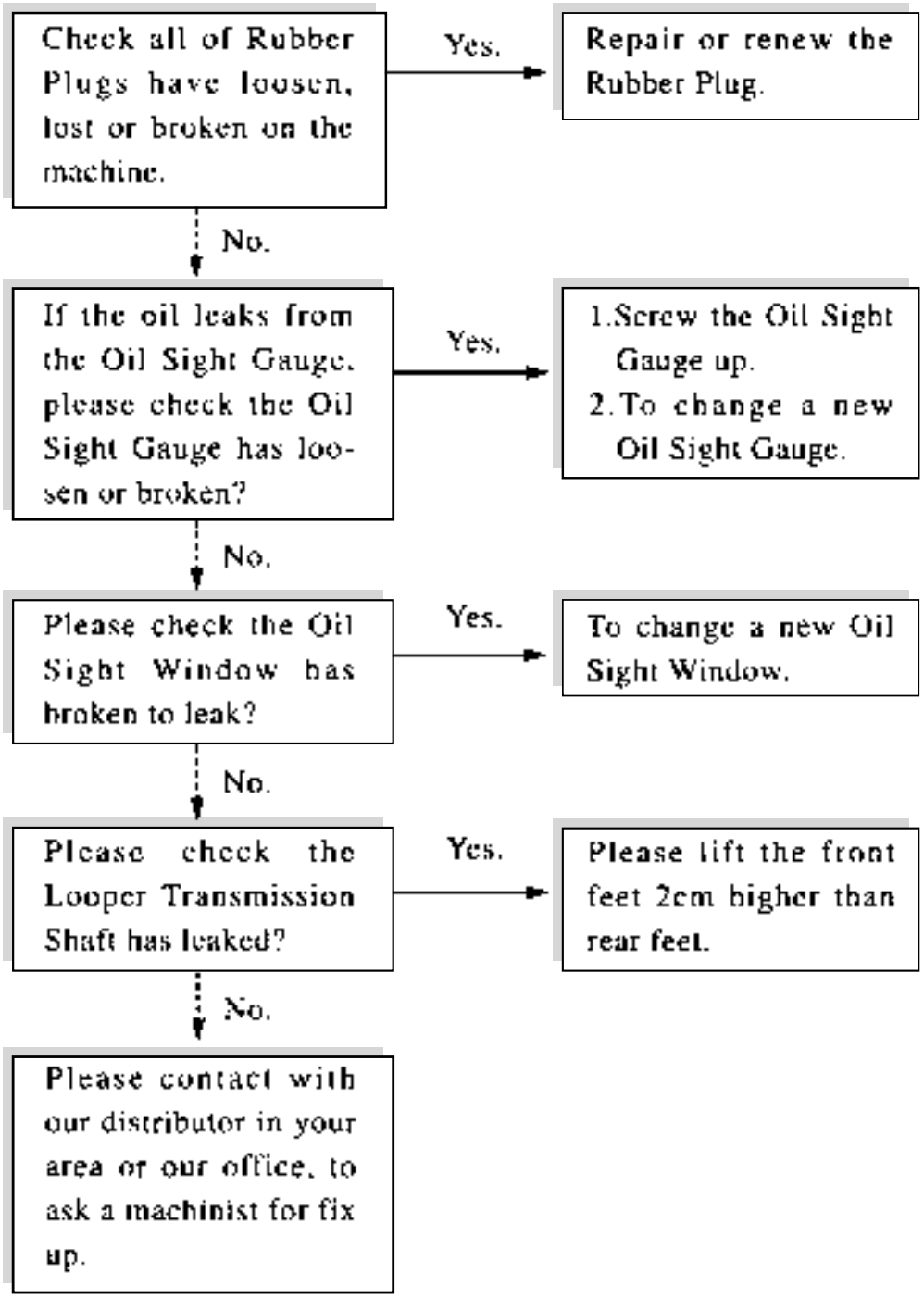
Check all of Rubber Plugs have loosen, lost or broken on the machine.
Yes.
Repair or renew the Rubber Plug.
No.
If the oil leaks from the Oil Sight Gauge, please check the Oil Sight Gauge has loosen or broken?
Yes.
1.Screw the Oil Sight Gauge up.
2.To change a new Oil Sight Gauge.
No.
Please check the Oil Sight Window has broken to leak?
Yes.
To change a new Oil Sight Window.
No.
Please check the Looper Transmission Shaft has leaked?
Yes.
Please lift the front feet 2cm higher than rear feet.
No.
Please contact with our distributor in your area or our office, to ask a machinist for fix up.

四、桌板图

A. 车台安装位置图【电子马达】：

A. TABLE TOP INSTALLATION(SERVO MOTOR)

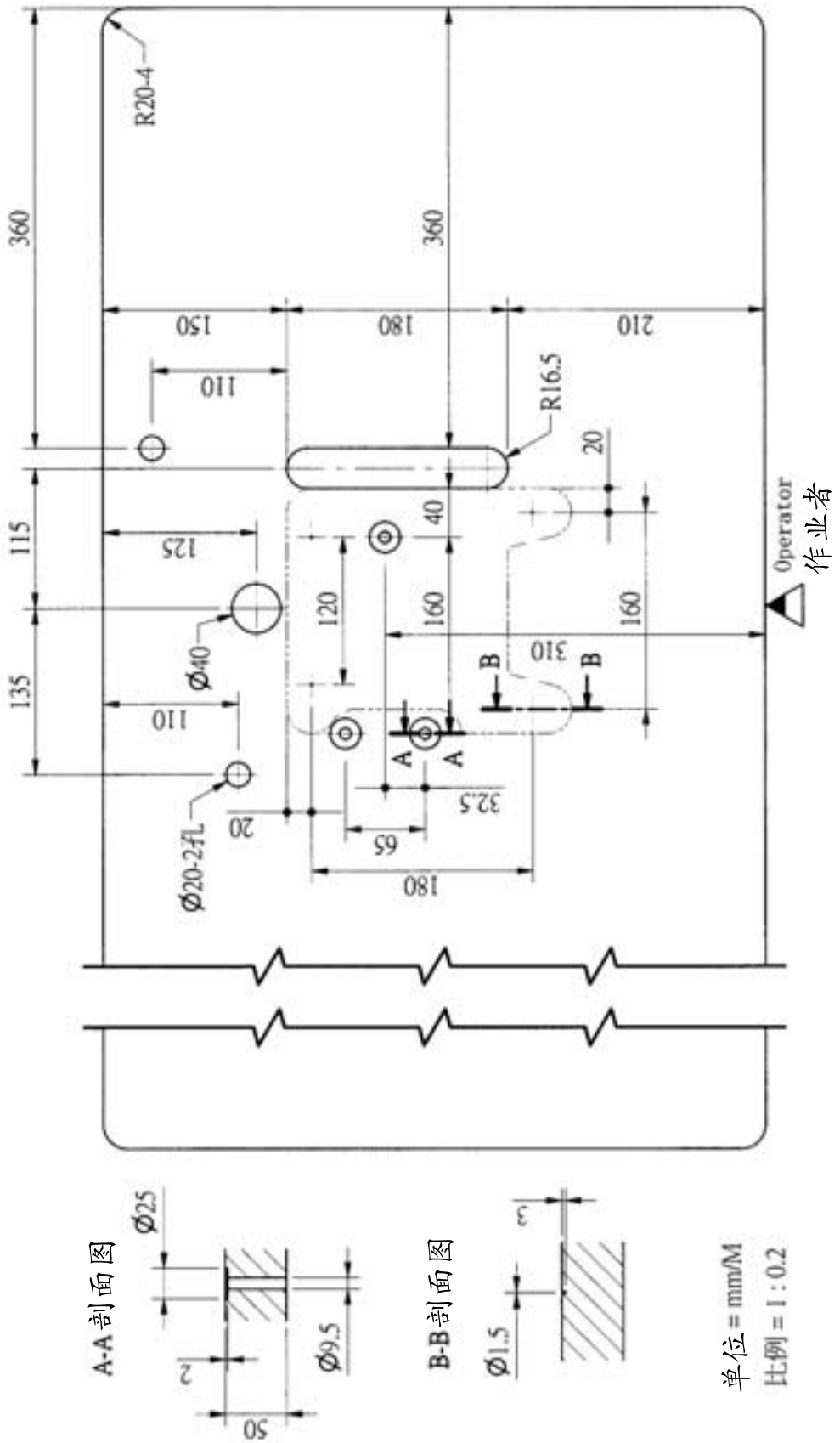

四、桌板图

A. 车台安装位置图【普通马达】：

A. TABLE TOP INSTALLATION(CLUTCH MOTOR)

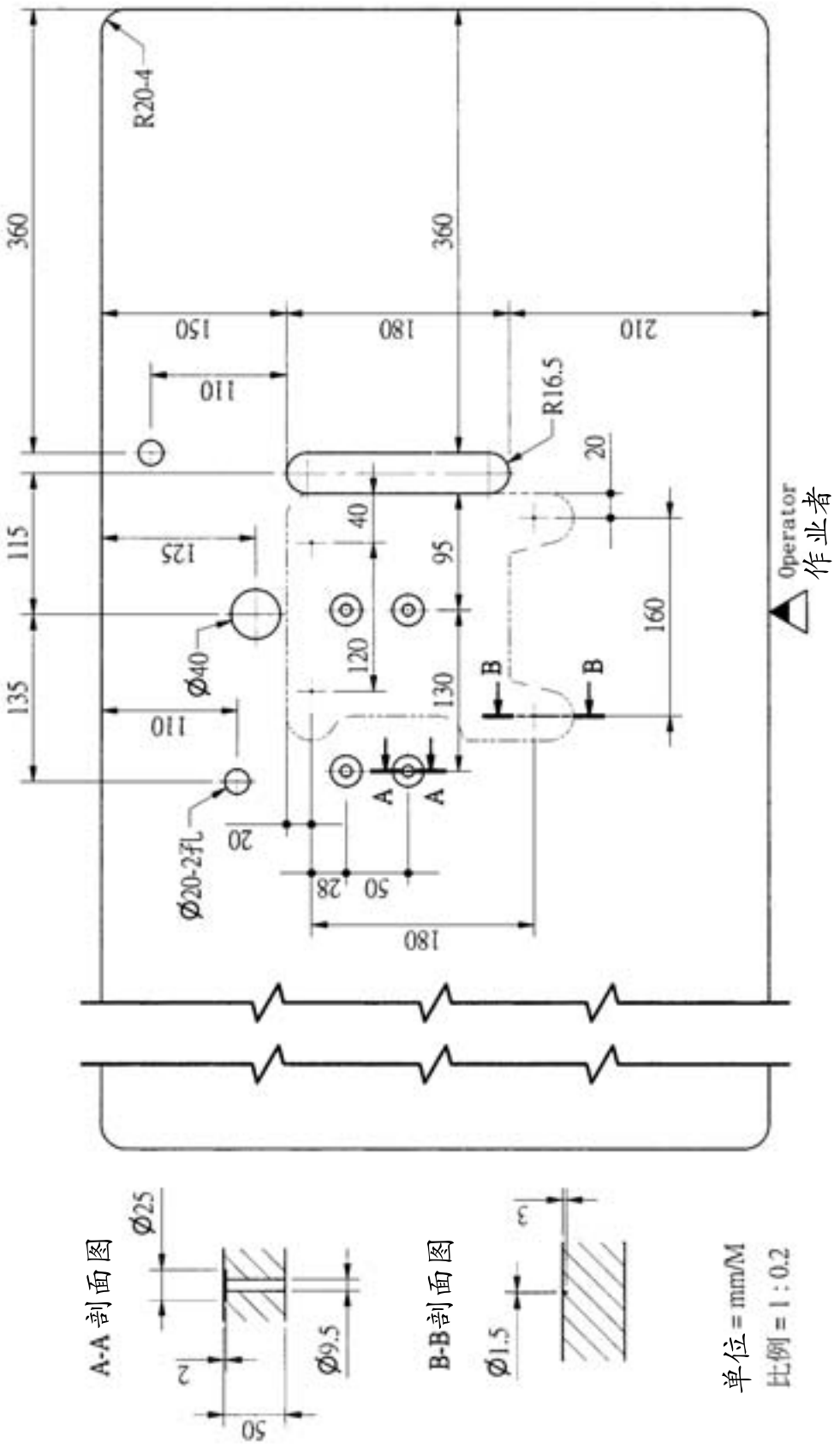

FW-777零件本
PARTS BOOK

CONTENTS 目 次

MISCELLANEOUS COVERS(1)……机壳结构(1)…… 1
MISCELLANEOUS COVERS(2)……机壳结构(2)…… 2
NEEDLE BAR MECHANISM……针柱结构…… 3
PRESSER FOOT & SPREADER MECHAIISM……压脚及上叉结构…… 4
FEED & LOOPER DRIVING MECHANISM……送料具及下钩针结构…… 5
LOWER MAIN SHAFT DRIVING MECHANISM(1)……下主轴传动结构(1)…… 6
LOWER MAIN SHAFT DRIVING MECHANISM(2)……下主轴传动结构(2)…… 7
LOOPER DRIVING MECNANISM……下勾针驱动结构…… 8
MISCELLANEOUS THREAD EYELETS……过线结构…… 9
LUBRICATING MECHANISM……润滑结构…… 10
THREAD STAND &SUPPORTING BOARD……线架及底板结构…… 11
SUPPLEMENTARY MECHANISM……布板结构…… 12
ATTACHMENT BOX……附件盒…… 13
ACCESSORTIES……附配件…… 14
NEEDLE DISTANCE STANDARDS FORM……针距规格表…… 15
PRESSER FOOT……押脚组规格表…… 16

1

FA

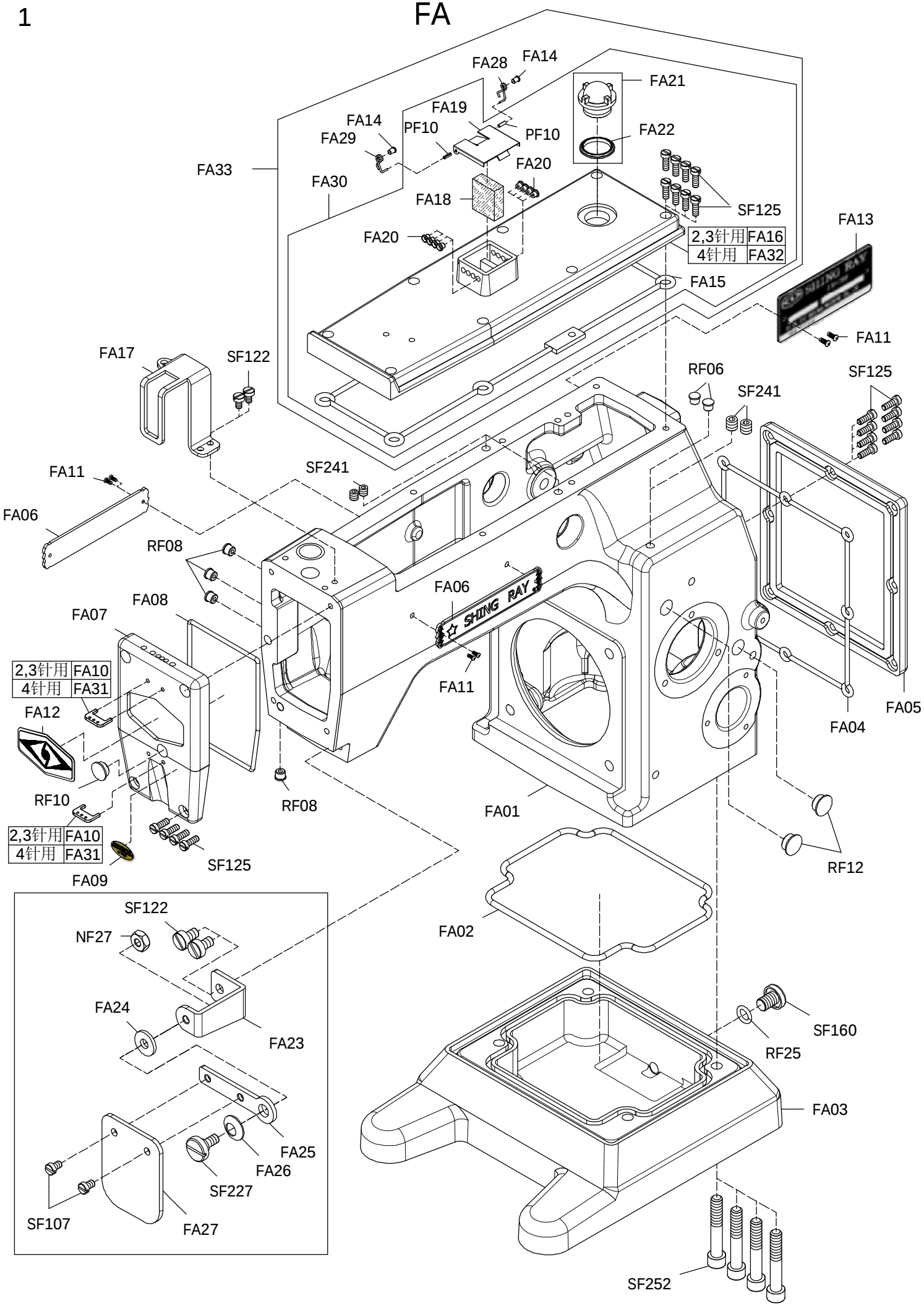
FA28
FA14
FA21
FA19
FA14
PF10
PF10
FA22
FA29
FA33
FA20
FA30
FA18
SF125
FA20
2,3针用 FA16
4针用 FA32
FA13
FA15
FA11
FA17
SF122
RF06
SF241
SF125
FA11
SF241
FA06
RF08
FA06
FA08
FA07
FA11
2,3针用 FA10
4针用 FA31
FA12
FA04
FA05
RF10
RF08
FA01
2,3针用 FA10
4针用 FA31
SF125
RF12
FA09
FA02
SF122
NF27
SF160
FA24
RF25
FA23
FA03
FA25
FA26
SF227
SF107
FA27
SF252

MISCELLANEOUS COVERS(1) 机壳结构(1) 1

Ref. No.		Parts. No.	Description	品名	Amt. Req.
1		0777FA01	Machine Frame Unit	机壳	1
2		0777FA02	Oil Seal Gasket	油封	1
3		0777FA03	Oil Reservoir	油槽	1
4		0777FA04	Oil Seal Gasket	油封	1
5		0777FA05	Rear Cover	后盖	1
6		0777FA06	Emblem(Long)	铭牌(长)	2
7		0777FA07	Front Cover	前盖	1
8		0777FA08	Oil Seal Gasket	油封	1
9		0777FA09	Paster(TVx7)	贴纸-TVx7	1
10	★	0777FA10	Needle Thread Eyelet	过线导片	2
11		0777FA11	Rivet	铆钉	6
12		0777FA12	Emblem(Lozenge)	铭牌(菱形)	1
13		0777FA13	Model Plate(see the below)	型号铭牌	1
14	★	0777FA14	Ceramics Thread Eyelete	陶瓷过线孔(粉)(4针用)	2
15		0777FA15	Oil Seal Gasket	油封	1
16	★	0777FA16	Top Cover	上盖	1
17		0777FA17	Needle Cover	针柱护盖	1
18		0777FA18	Felt	吸油棉	1
19		0777FA19	SP Container Cover	吸油槽盖	1
20		0777FA20	Ceramics Thread Eyelete	陶瓷过线孔	8
21		0777FA21	Oil Sight Window C.Set	上油镜组件	1
22		0777FA22	Oil Sight Seal	上油镜油封	1
23		0777FA23	Safety Plate Support	护目镜固定座	1
24		0777FA24	Washer	垫片	1
25		0777FA25	Safety Plate Holder	护目镜支架	1
26		0777FA26	Washer	垫片	1
27		0777FA27	Safety Plate	护目镜片	1
28	★	0777FA28	Spring(Right)	弹簧(右)(4针用)	1
29	★	0777FA29	Spring(Left)	弹簧(左)(4针用)	1
30	★	0777FA30	Top Cover C.Set	上盖组	1
31	★	0777FA31	Needle Thread Eyelet	过线导片(4针用)	2
32	★	0777FA32	Top Cover	上盖(4针用)	1
33	★	0777FA33	Top Cover C.Set	上盖组(4针用)	1
34	★	0777PF10	SP Container Cover Pin	插销	2
35		0777NF27	Nut	螺母	1
36		0777RF06	Oil Seal Gasket	油封	2
37		0777RF08	Oil Seal Gasket	油封	4
38		0777RF10	Oil Seal Gasket	油封	1
39		0777RF12	Oil Seal Gasket	油封	2
40		0777RF25	O-Ring	O形橡胶圈	1

★请参照附件【针距规格表】

1

FA

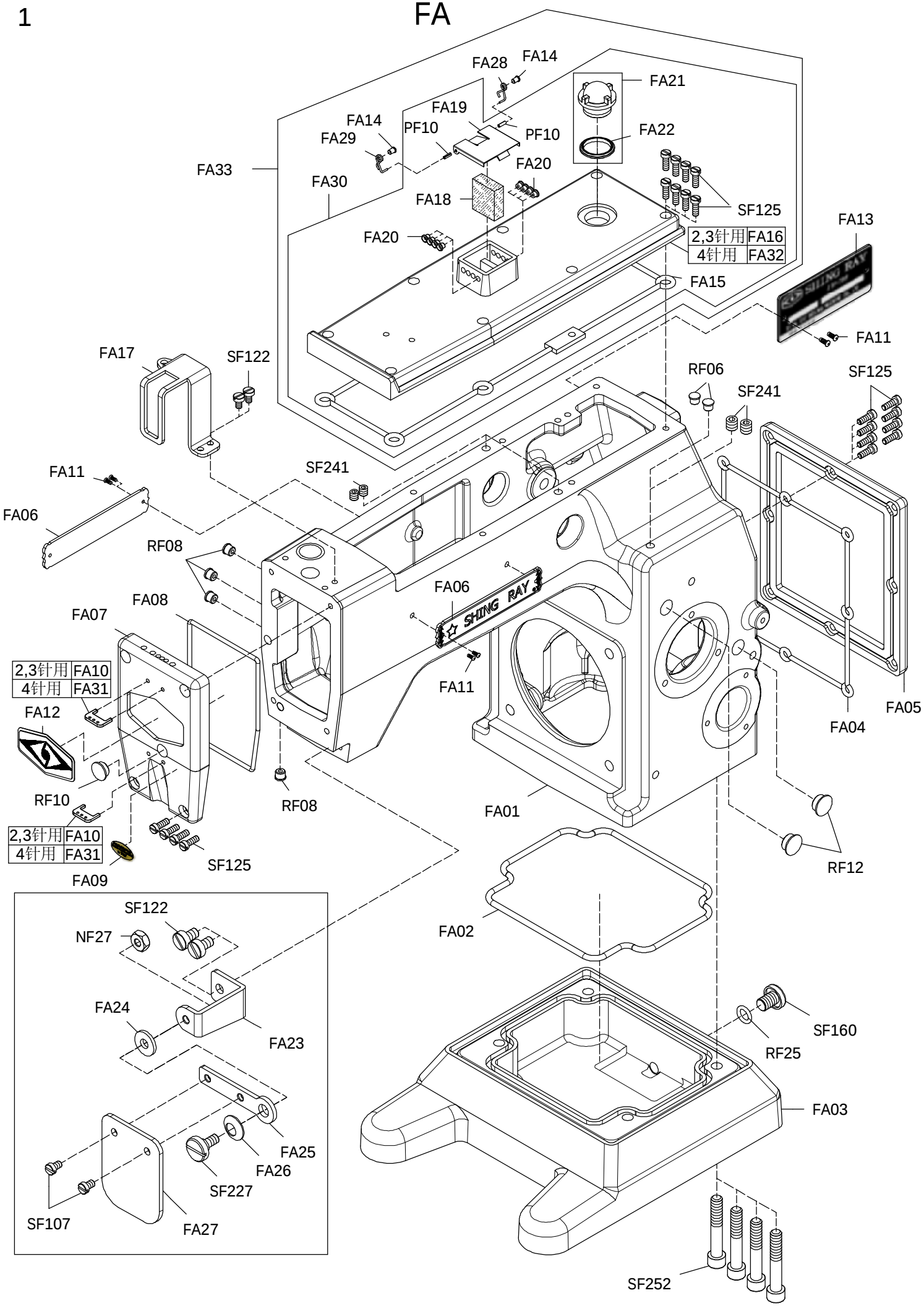
FA28
FA14
FA21
FA19
FA14
PF10
PF10
FA22
FA29
FA33
FA20
FA30
FA18
SF125
FA20
2,3针用 FA16
4针用 FA32
FA13
FA15
FA11
FA17
SF122
RF06
SF241
SF125
FA11
SF241
FA06
RF08
FA06
FA08
FA07
FA11
2,3针用 FA10
4针用 FA31
FA12
FA04
FA05
RF10
RF08
FA01
2,3针用 FA10
4针用 FA31
SF125
RF12
FA09
FA02
SF122
NF27
SF160
FA24
RF25
FA23
FA03
FA25
FA26
SF227
SF107
FA27
SF252

Ref. No.	Parts. No.	Description	品名	Amt. Req.
41	0777SF107	Screw(1/8-44x5)……	螺丝……	2
42	0777SF122	Screw(11/64-40x7)……	螺丝……	4
43	0777SF125	Screw(11/64-40x12)……	螺丝……	20
44	0777SF160	Screw(3/8-24x11.5)……	螺丝……	1
45	0777SF227	Screw(M4-0.7x10)……	螺丝……	1
46	0777SF241	Screw(M6-1x10)……	螺丝……	4
47	0777SF252	Screw(M8-1.25x50)……	螺丝……	4

FB

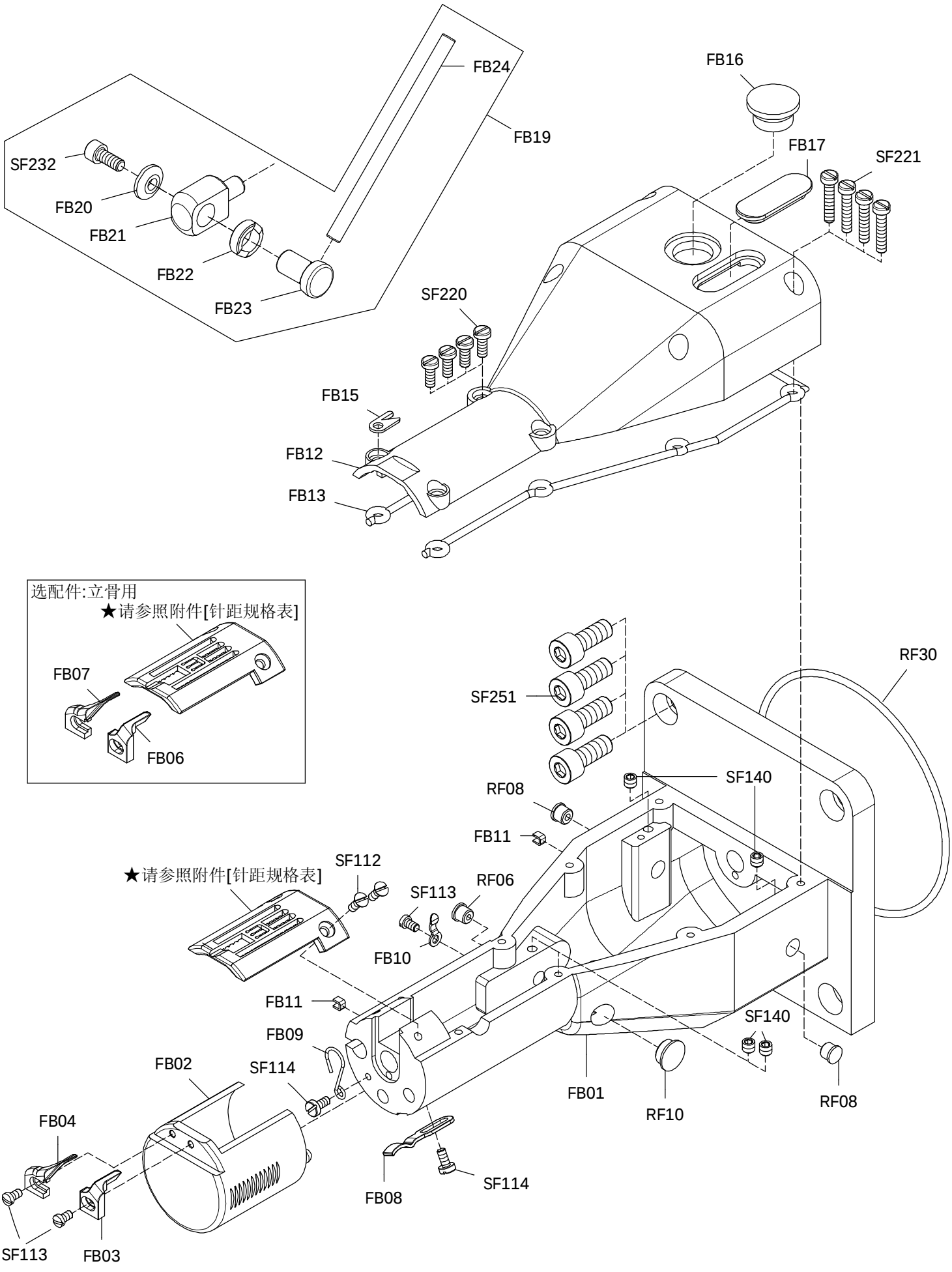
FB24
FB19
FB16
FB17
SF221
SF232
FB20
FB21
FB22
FB23
SF220
FB15
FB12
FB13
选配件:立骨用
★请参照附件[针距规格表]
FB07
FB06
RF30
SF251
SF140
RF08
FB11
★请参照附件[针距规格表]
SF112
SF113
RF06
FB10
FB11
SF140
FB09
FB02
SF114
FB01
RF10
RF08
FB04
FB08
SF114
SF113
FB03

Ref. No.		Parts. No.	Description	品名	Amt. Req.
1		0777FB01	Base	底座	1
2		0777FB02	Chin	下巴套管	1
3	★	0777FB03	Covering Stitch Fabric Guider(Right)	倒骨布导器(右)	1
4	★	0777FB04	Covering Stitch Fabric Guider(Left)	倒骨布导器(左)	1
5	★	0777FB06	Fabric Guide(Right)	立骨布导器(右)	1
6	★	0777FB07	Fabric Guide(Left)	立骨布导器(左)	1
7		0777FB08	Chin Bushing	套管支撑片	1
8		0777FB09	Spring Clasp	弹簧钩	1
9		0777FB10	Spring Slice	弹簧片	1
10		0777FB11	Lead Of Iron	导线铁片	2
11		0777FB12	Cover Plate(Lower)	下座盖	1
12		0777FB13	Oil Seal Gasket	油封	1
13		0777FB15	Thread Cutter	割线刀	1
14		0777FB16	Oil Sight Window	油镜	1
15		0777FB17	Oil Seal Gasket	油封	1
16		0777FB19	Thread Eyelet Pole C.Set	过线导杆组	1
17		0777FB20	Washer	华司	1
18		0777FB21	Tie-in Of Universal	万向接头	1
19		0777FB22	Washer	定位垫片	1
20		0777FB23	Screw	螺丝	1
21		0777FB24	Thread Eyelet Pole	过线导杆	1
22		★	Stitch Plate	针板	1
23		★	Needle Plate For Covering Seam	立骨用针板	1
24		0777RF06	Oil Seal Gasket	油封	1
25		0777RF08	Oil Seal Gasket	油封	2
26		0777RF10	Oil Seal Gasket	油封	1
27		0777RF30	O-Ring	O形橡胶圈	1
28		0777SF112	Screw(9/64-40x6)	螺丝	2
29		0777SF113	Screw(9/64-40x6)	螺丝	3
30		0777SF114	Screw(9/64-40x8)	螺丝	2
31		0777SF140	Screw(7/32-32x5.5)	螺丝	4
32		0777SF220	Screw(M4-0.7x10)	螺丝	4
33		0777SF221	Screw(M4-0.7x21)	螺丝	4
34		0777SF232	Screw(M5-0.8x12)	螺丝	1
35		0777SF251	Screw(M8-1.25x20)	螺丝	4

★请参照附件【针距规格表】

FC

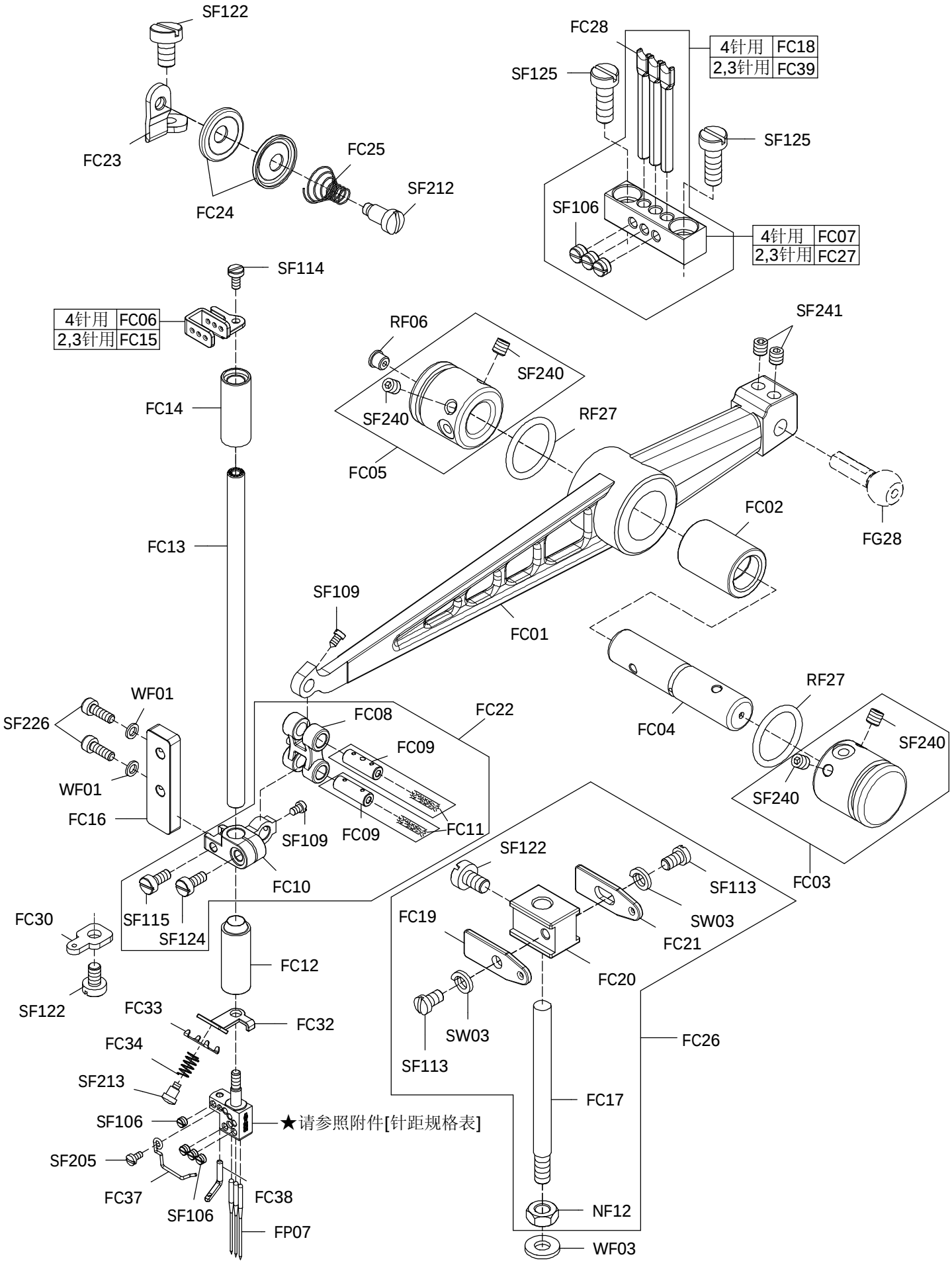
SF122
FC23
FC24
FC25
SF212
FC28
SF125
4针用 FC18
2,3针用 FC39
SF125
SF106
4针用 FC07
2,3针用 FC27
SF114
4针用 FC06
2,3针用 FC15
FC14
RF06
SF240
SF240
FC05
RF27
SF241
FC13
FC02
FG28
SF109
FC01
WF01
SF226
WF01
FC16
FC08
FC22
FC09
FC09
FC11
SF109
FC10
SF115
SF124
RF27
FC04
SF240
SF240
FC03
FC30
SF122
FC12
FC33
FC32
FC34
SF213
SF106
★请参照附件[针距规格表]
SF205
FC37
SF106
FC38
FP07
SF122
FC19
SF113
SW03
FC21
FC20
SW03
SF113
FC26
FC17
NF12
WF03

NEEDLE BAR MECHANISM 针柱结构 3

Ref. No.		Parts. No.	Description	品名	Amt. Req.
1		0777FC01	Shoulder Pole	扁担	1
2		0777FC02	Shoulder Pole Bushing	扁担套管	1
3		0777FC03	Shoulder Pole Support C.Set	扁担座组	1
4		0777FC04	Heart Of The Shoulder Pole	扁担心	1
5		0777FC05	Shoulder Pole Support C.Set	扁担座组	1
6	★	0777FC06	Needle Bar Thread Eyele	针柱顶过线杆(4针用)	1
7	★	0777FC07	Needle Thread Supplemenyary Adjusting Fork Stand	针线供给量调整叉座(4针用)	1
8		0777FC08	Glasses	眼镜	1
9		0777FC09	Center Of The Glasses	眼镜心	2
10		0777FC10	Needle Bar Support	针柱定位座	1
11		0777FC11	Cotton Thread	棉线	2
12		0777FC12	Needle Bar Bushing(Upper)	针柱套管(上)	1
13		0777FC13	Needle Bar	针柱	1
14		0777FC14	Needle Bar Bushing(Lower)	针柱套管(下)	1
15	★	0777FC15	Needle Bar Thread Eyele	针柱顶过线杆	1
16		0777FC16	Slide Block	针柱定位滑块	1
17		0777FC17	Supplementary Adjusting Bracket Stand	供线量调整托架支柱	1
18	★	0777FC18	Adjusting Stand C.Set	调整叉座组(4针用)	1
19		0777FC19	Spreader Threed Supplemenyary Adjusting Plate	上饰线供线量调整片	1
20		0777FC20	Spreader Threed Supplemenyary Adjusting Bracket	上饰线供线量调整托架	1
21		0777FC21	Spreader Threed Supplemenyary Adjusting Plate	上饰线供线量调整片	1
22		0777FC22	Needle Bar Connecting Link C.Set	针柱连杆组	1
23		0777FC23	Top Cover Thread Guide	上饰线导板	1
24		0777FC24	Supplementary Tension Disc	上饰线张力调整盘	2
25		0777FC25	Supplementary Tension Spring	上饰线张力调整弹簧	1
26		0777FC26	Supplementary Adjusting Bracket C.Set	供线量调整托架组	1
27	★	0777FC27	Needle Thread Supplemenyary Adjusting Fork Stand	针线供给量调整叉座	1
28	★	0777FC28	Needle Thread Supplementary Adjusting Fork	针线供给量调整叉	3
29		0777FC30	Thread Eyelet(Top)	上盖过线片	1
30		0777FC32	Thread Retainer Disc Support	针线张力调整压板固定座	1
31		0777FC33	Needle Thread Retainer Disc	针线张力调整压板	1
32		0777FC34	Needle Thread Retainer Spring	针线张力调整弹簧	1
33		0777FC37	Needle Thread Guiding Wine	针线过线铁线	1
34		0777FC38	Top Cover Thread Eyelet	上饰线过线片	1
35	★	0777FC39	Adjusting Stand C.Set	调整叉座组	1
36		★	Needle Clamp	针镏	1
37		0777FP07	Needle(TV*7)	机针	3
38		0777NF12	Nut(11/64-40x8)	螺帽	1
39		0777RF06	Oil Seal Gasket	止油塞	1
40		0777RF27	O-Ring	O形橡胶圈	2

★请参照附件【针距规格表】

FC

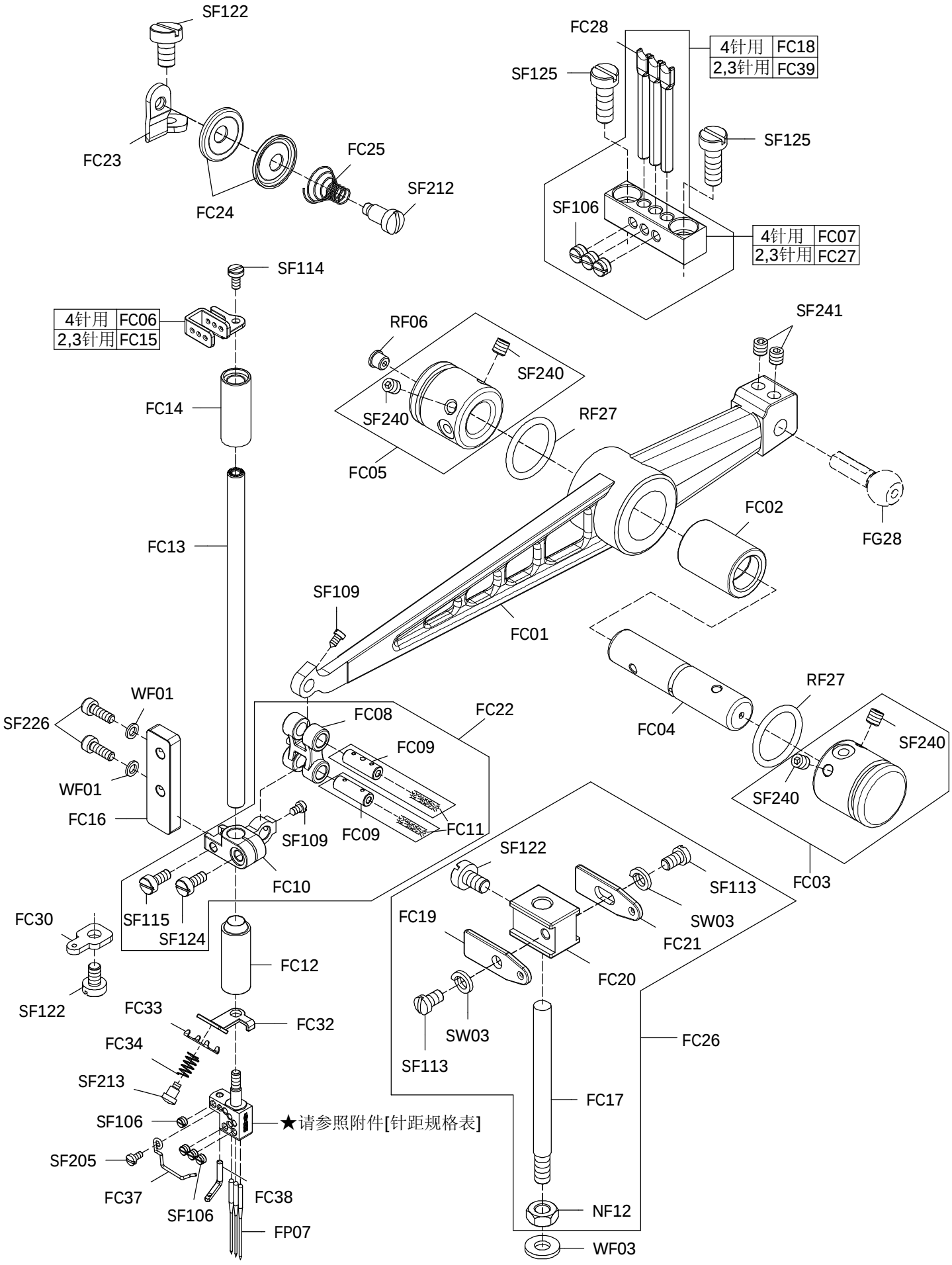
SF122
FC23
FC24
FC25
SF212
FC28
SF125
4针用 FC18
2,3针用 FC39
SF125
SF106
4针用 FC07
2,3针用 FC27
SF114
4针用 FC06
2,3针用 FC15
FC14
RF06
SF240
SF240
FC05
RF27
SF241
FC13
FC02
FG28
SF109
FC01
WF01
SF226
WF01
FC16
FC08
FC22
FC09
FC09
FC11
SF109
FC10
SF115
SF124
RF27
FC04
SF240
SF240
FC03
FC30
SF122
FC12
FC33
FC32
FC34
SF213
SF106
★请参照附件[针距规格表]
SF205
FC37
SF106
FC38
FP07
SF122
FC19
SF113
SW03
FC21
FC20
SW03
SF113
FC26
FC17
NF12
WF03

Ref. No.	Parts. No.	Description	品名	Amt. Req.
41	0777SF106	Screw(1/8-44x3)……	螺丝……	7
42	0777SF109	Screw(1/8-44x6)……	螺丝……	2
43	0777SF113	Screw(9/64-40x6)……	螺丝……	2
44	0777SF114	Screw(9/64-40x8)……	螺丝……	1
45	0777SF115	Screw(9/64-40x12)……	螺丝……	1
46	0777SF122	Screw(11/64-40x7)……	螺丝……	3
47	0777SF124	Screw(11/64-40x10)……	螺丝……	1
48	0777SF125	Screw(11/64-40x12)……	螺丝……	2
49	0777SF205	Screw(M2.6-0.45x5)……	螺丝……	1
50	0777SF212	Screw(M3-0.5x8.5)……	螺丝……	1
51	0777SF213	Screw(M3-0.5x6.5)……	螺丝……	1
52	0777SF226	Screw(M4-0.7x12)……	螺丝……	2
53	0777SF240	Screw(M6-1x6)……	螺丝……	4
54	0777SF241	Screw(M6-1x10)……	螺丝……	2
55	0777SW03	Spring Washer……	弹簧垫片……	2
56	0777WF01	Washer……	垫片……	2
57	0777WF03	Washer……	垫片……	1

FD

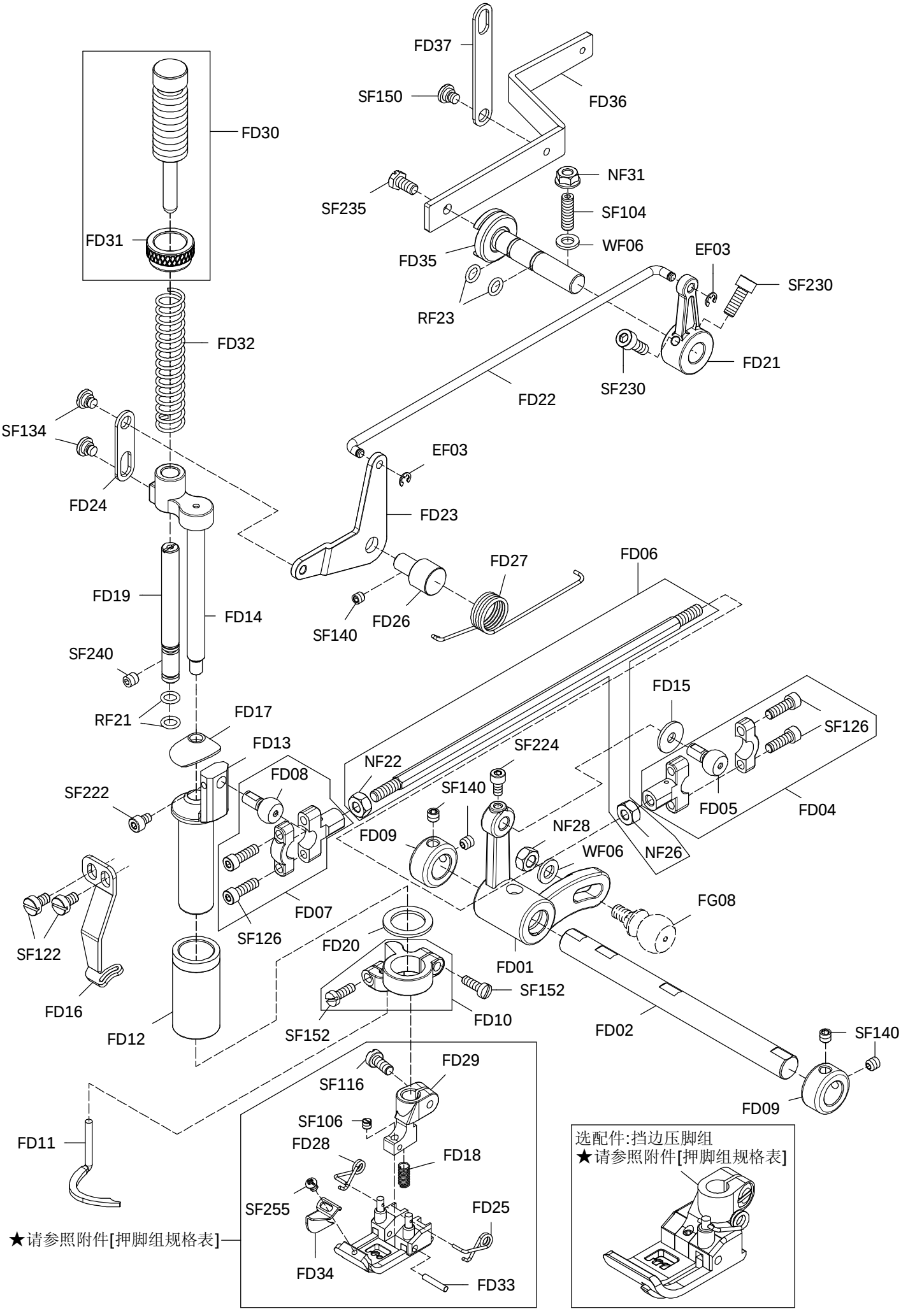
FD37
SF150
FD36
FD30
NF31
SF235
SF104
WF06
FD31
FD35
EF03
SF230
RF23
FD21
SF230
FD32
FD22
SF134
EF03
FD24
FD23
FD27
FD06
FD19
FD14
SF140
FD26
SF240
FD15
SF126
RF21
FD17
FD13
SF224
NF22
FD08
SF222
SF140
FD05
FD04
FD09
NF28
WF06
NF26
FG08
FD07
SF126
SF122
FD20
FD01
SF152
FD16
FD10
FD12
SF152
FD02
SF140
FD09
FD29
SF116
SF106
FD28
FD18
FD11
SF255
FD25
★请参照附件[押脚组规格表]
FD34
FD33
选配件:挡边压脚组
★请参照附件[押脚组规格表]

Ref. No.	Parts. No.	Description	品名	Amt. Req.
1	0777FD01	Lifter Lever	提升拉柄	1
2	0777FD02	Shaft	轴心	1
3	0777FD04	Ball Joint(Inverse) C.Set	上拨线珠(倒)组	1
4	0777FD05	Ball Joint(Inverse)	上拨线珠(倒)	1
5	0777FD06	Ball Joint Driving Lever C.Set	上拨线带动拉杆组	1
6	0777FD07	Ball Joint(Positive) C.Set	上拨线珠(正)组	1
7	0777FD08	Ball Joint(Positive)	上拨线珠(正)	1
8	0777FD09	Collar	轴环	2
9	0777FD10	Spreader Holder C.Set	上勾针固定座组	1
10	0777FD11	Spreader	上勾针	1
11	0777FD12	Presser Bar Bushing	压脚套管	1
12	0777FD13	Shaft Bushing	轴心衬套	1
13	0777FD14	Stopcock	活塞心	1
14	0777FD15	Plastic Washer	塑胶垫片	1
15	0777FD16	Fixing Piece	上把固定片	1
16	0777FD17	Washer	垫片	1
17	0777FD18	Spring	弹簧	1
18	0777FD19	Fixed Shaft Stopcock	活塞固定心	1
19	0777FD20	Washer	垫片	1
20	0777FD21	Presser Bar Driver	压脚传动调整器	1
21	0777FD22	Presser Bar Transmission Staff	压脚传动杆	1
22	0777FD23	Presser Bar Transmission Plate	压脚传动片	1
23	0777FD24	Spring Washer	弹片	1
24	0777FD25	Spring(Right)	弹簧-右	1
25	0777FD26	Fixing Pin	固定插销	1
26	0777FD27	Spring	弹簧	1
27	0777FD28	Spring(Left)	弹簧-左	1
28	0777FD29	Presser Foot Holder	固定座	1
29	0777FD30	Presser Foot Pressure Regulatoy C.Set	压脚调节器组	1
30	0777FD31	Lock Nut	并紧螺帽	1
31	0777FD32	Presser Bar Spring	压脚棒状弹簧	1
32	0777FD33	Pin	插销	1
33	0777FD34	Presser Foot Gudie	押舌	1
34	0777FD35	Presser Bar Transmission Shaft	压脚传动后固定座	1
35	0777FD36	Presser Bar Transmission Support	压脚传动架	1
36	0777FD37	Presser Bar Transmission Plate	压脚传动片	1
37	★	Presser Foot	挡边压脚组(选配件)	1
38	★	Presser Foot	压脚组	1
39	0777EF03	Retaining Ring	扣环	2
40	0777NF22	Nut	螺帽	1

★请参照附件【押脚组规格表】

FD

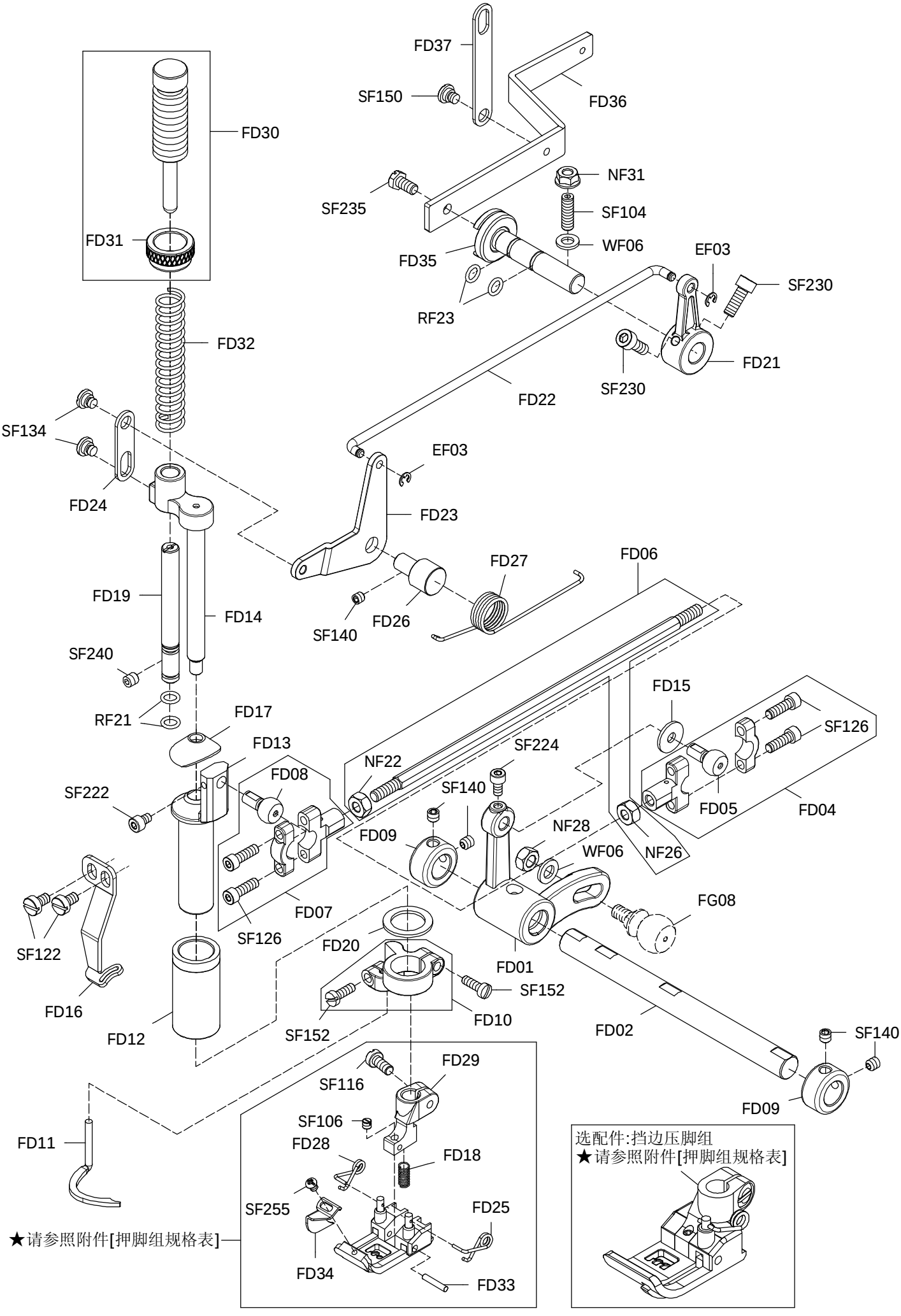
FD37
SF150
FD36
FD30
NF31
SF235
SF104
WF06
FD31
FD35
EF03
SF230
RF23
FD21
SF230
FD32
FD22
SF134
EF03
FD24
FD23
FD27
FD06
FD19
FD14
SF140
FD26
SF240
FD15
SF126
RF21
FD17
FD13
SF224
NF22
FD08
SF222
SF140
FD05
FD04
FD09
NF28
WF06
NF26
FG08
FD07
SF126
SF122
FD20
FD01
SF152
FD16
FD10
FD12
SF152
FD02
SF140
FD09
FD29
SF116
SF106
FD28
FD18
FD11
SF255
FD25
★请参照附件[押脚组规格表]
FD34
FD33
选配件:挡边压脚组
★请参照附件[押脚组规格表]

Ref. No.	Parts. No.	Description	品名	Amt. Req.
41	0777NF26	Nut	螺帽	1
42	0777NF28	Nut	螺帽	1
43	0777NF31	Nut	螺帽	1
44	0777RF21	O-Ring	O形橡胶圈	2
45	0777RF23	O-Ring	O形橡胶圈	1
46	0777SF104	Screw(M6-1x20)	螺丝	1
47	0777SF106	Screw(1/8-44x3)	螺丝	1
48	0777SF116	Screw(9/64-40x8)	螺丝	1
49	0777SF122	Screw(11/64-40x7)	螺丝	2
50	0777SF126	Screw(11/64-40x14)	螺丝	4
51	0777SF150	Screw(3/16-32x5.5)	螺丝	1
52	0777SF134	Screw(3/16-32x5)	螺丝	2
53	0777SF140	Screw(7/32-32x5.5)	螺丝	5
54	0777SF255	Screw(3/32-56x3)	螺丝	1
55	0777SF222	Screw(M4-0.7x6)	螺丝	1
56	0777SF224	Screw(M4-0.7x8)	螺丝	1
57	0777SF152	Screw(M4-0.7x12)	螺丝	2
58	0777SF230	Screw(M5-0.8x12)	螺丝	2
59	0777SF235	Screw(M5-0.8x10)	螺丝	1
60	0777SF240	Screw(M6-1x6)	螺丝	1
61	0777WF06	Washer	垫片	2

FE

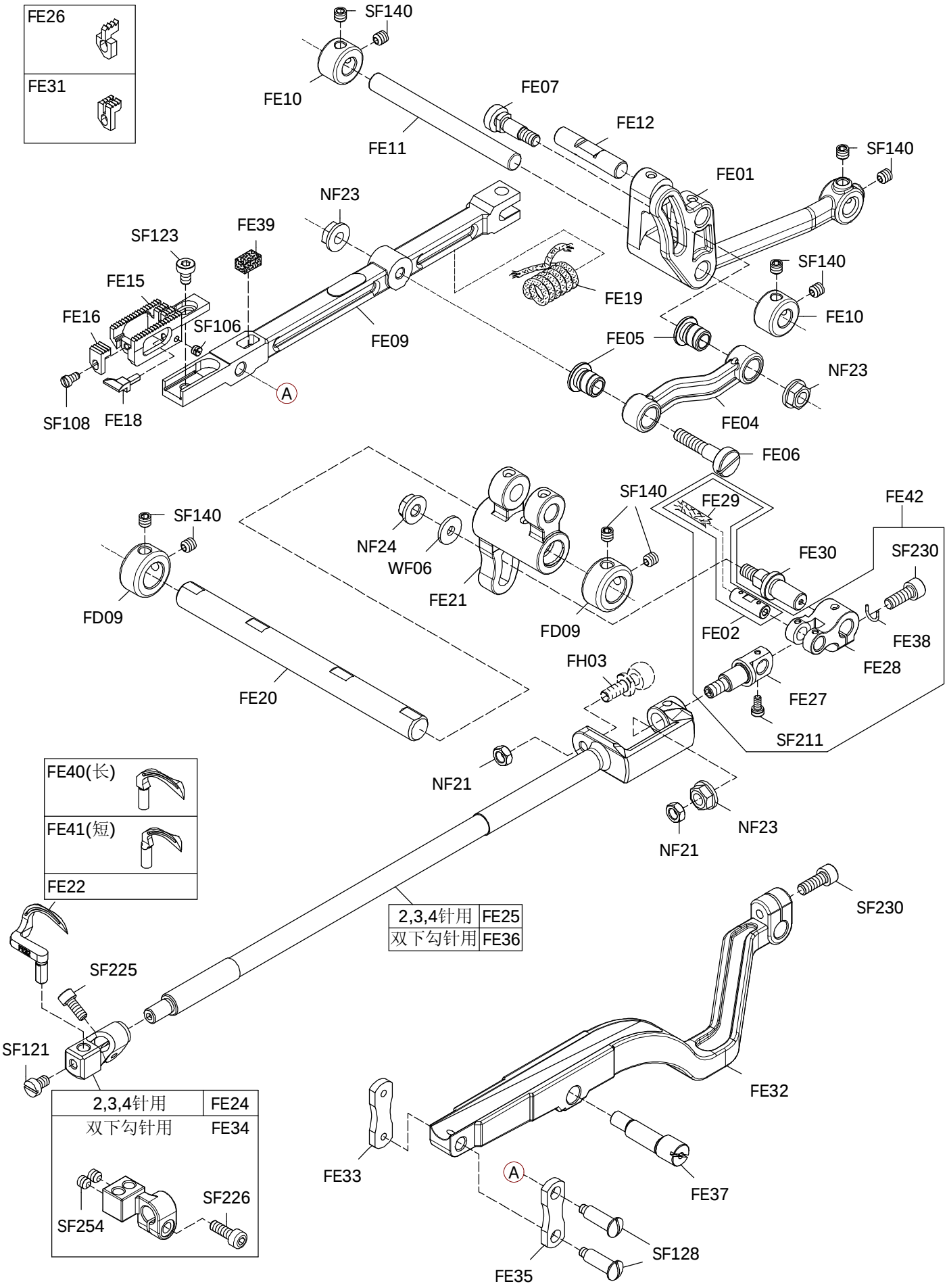
FE26
FE31
SF140
FE10
FE07
FE11
FE12
FE01
SF140
NF23
FE39
SF123
FE15
FE16
SF106
FE09
FE19
SF140
FE10
FE05
NF23
FE04
SF108
FE18
A
FE06
SF140
FE29
FE42
NF24
WF06
FE21
FD09
FD09
FE30
SF230
FE02
FE38
FE28
FE20
FH03
FE27
SF211
NF21
NF23
NF21
FE40(长)
FE41(短)
FE22
2,3,4针用 FE25
双下勾针用 FE36
SF230
SF225
SF121
FE32
2,3,4针用 FE24
双下勾针用 FE34
SF254
SF226
FE33
A
FE37
SF128
FE35

DRIVING MECHANISM　　送料具及下钩针结构　　5

Ref. No.		Parts. No.	Description	品名	Amt. Req.
1		0777FE01	Driving Rod	传动连杆	1
2		0777FE02	Connecting Pin	连杆插销	1
3		0777FE04	Thichness Needle Pressure Regulatoy	粗细针调整器	1
4		0777FE05	Presser Foot Holder	固定座	2
5		0777FE06	Screw	螺丝	1
6		0777FE07	Presser Foot Holder	固定座	1
7		0777FE09	Differential Feeding Lever	送齿台	1
8		0777FE10	Collar	轴环	2
9		0777FE11	Mine Shaft For Feed Dog	九齿主轴	1
10		0777FE12	Shaft	轴心	1
11		0777FE15	Differential Feed Dog	前齿	1
12	★	0777FE16	Differential Feed Dog(Middle)	中间小齿	1
13		0777FE18	Needle Guard	顶针片	1
14		0777FE19	Cotton Thread(L=500mm)	棉线	1
15		0777FE20	Shaft	轴心	1
16		0777FE21	Looper Adjusting Holder	弯针带动座	1
17	★	0777FE22	Looper	下钩针	1
18	★	0777FE24	Looper Holder	弯针座	1
19	★	0777FE25	Looper Driving Shaft	弯针心	1
20	★	0777FE26	Differential Feed Dog(Middle)	中间小齿(立骨用)	1
21		0777FE27	Connecting Screw	连结螺丝	1
22		0777FE28	Driving Bracket	提升杆	1
23		0777FE29	Cotton Thread	棉线	1
24		0777FE30	Connecting Screw	连结螺丝	1
25	★	0777FE31	Differential Feed Dog(Middle)	中间小齿(4针用)	1
26		0777FE32	Main Feed Rocker Lever	主送料具摇臂	1
27		0777FE33	Differential Feed Bar Driving Connection	送料具差动轴驱动连杆	1
28	★	0777FE34	Looper Holder	弯针座(双下勾针用)	1
29		0777FE35	Differential Feed Bar Driving Connection	送料具差动轴驱动连杆	1
30	★	0777FE36	Looper Driving Shaft	弯针心(双下勾针用)	1
31		0777FE37	Feed Dog Lever Ecceneric Pin	送料具拉柄偏心销	1
32		0777FE38	Gasket	C型垫圈	1
33		0777FE39	Felt	羊毛垫	1
34	★	0777FE40	Looper-long	下钩针-长(双下勾针用)	1
35	★	0777FE41	Looper-short	下钩针-短(双下勾针用)	1
36		0777FE42	Driving Bracket C.Set	提升杆组	1
37		0777FD09	Collar	轴环	2
38		0777NF21	Nut	螺帽	2
39		0777NF23	Nut	螺帽	3
40		0777NF24	Nut	螺帽	1

★请参照附件【针距规格表】

FE

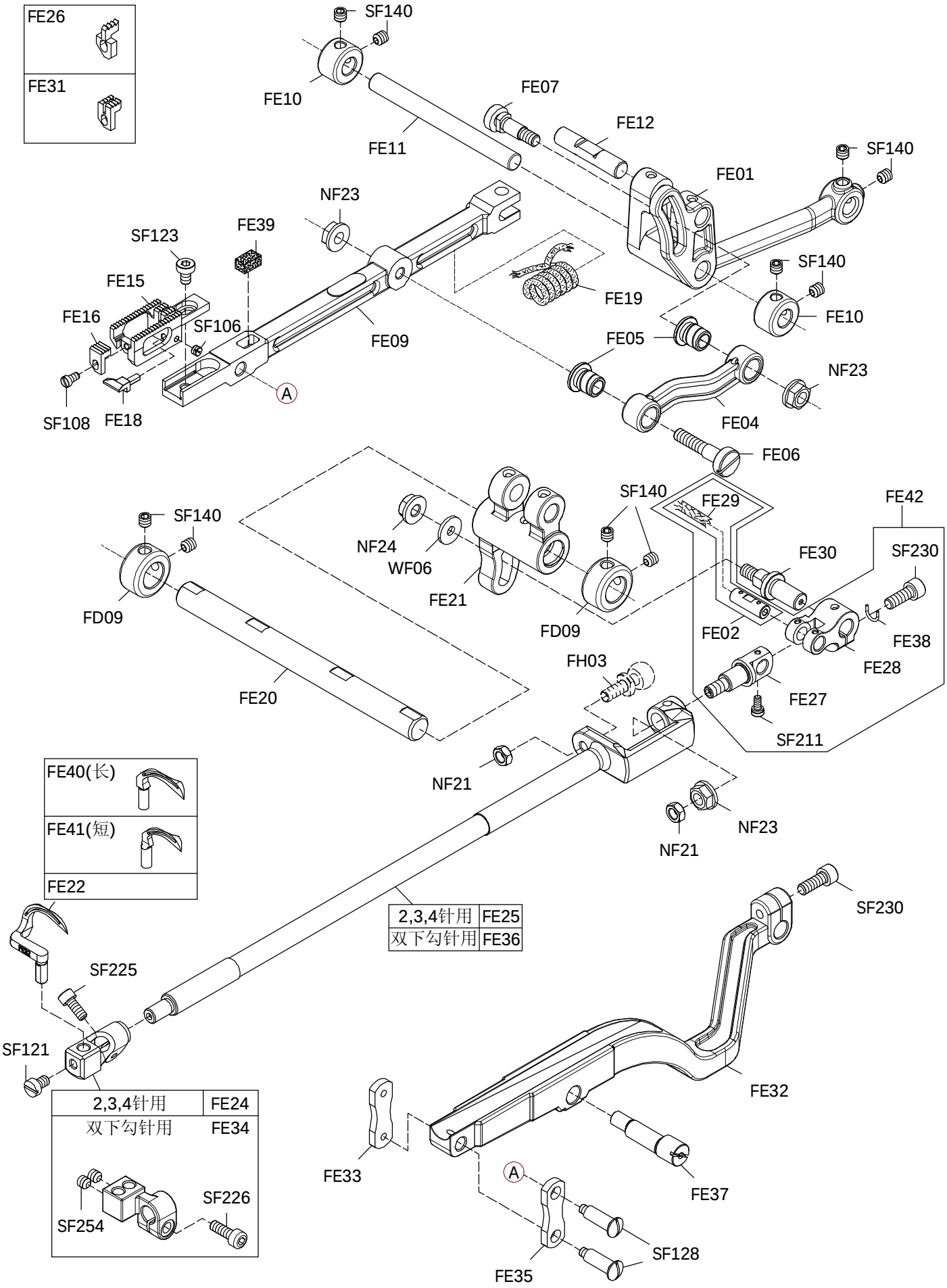
FE26
FE31
SF140
FE10
FE07
FE11
FE12
FE01
SF140
NF23
FE39
SF123
FE15
FE16
SF106
FE09
FE19
SF140
FE10
FE05
NF23
FE04
SF108
FE18
A
FE06
SF140
FE29
FE42
NF24
WF06
FE21
FD09
FD09
FE30
SF230
FE02
FE38
FE28
FE20
FH03
FE27
SF211
NF21
NF23
NF21
FE40(长)
FE41(短)
FE22
2,3,4针用 FE25
双下勾针用 FE36
SF230
SF225
SF121
FE32
2,3,4针用 FE24
双下勾针用 FE34
SF254
SF226
FE33
A
FE37
SF128
FE35

Ref. No.	Parts. No.	Description	品名	Amt. Req.
41	0777SF106	Screw(1/8-44x3)……	螺丝……	1
42	0777SF108	Screw(1/8-44x6)……	螺丝……	1
43	0777SF121	Screw(11/64-40x7)……	螺丝……	1
44	0777SF123	Screw(11/64-40x7)……	螺丝……	1
45	0777SF128	Screw(11/64-40x18)……	螺丝……	2
46	0777SF140	Screw(7/32-32x5.5)……	螺丝……	10
47	0777SF211	Screw(M3-0.5x6)……	螺丝……	1
48	0777SF225	Screw(M4-0.7x10)……	螺丝……	1
49	0777SF226	Screw(M4-0.7x12)……	螺丝……	1
50	0777SF230	Screw(M5-0.8x12)……	螺丝……	2
51	0777SF254	Screw(11/64-40x4)……	螺丝(双下勾针用)……	2
52	0777WF06	Washer……	垫片……	1

FG

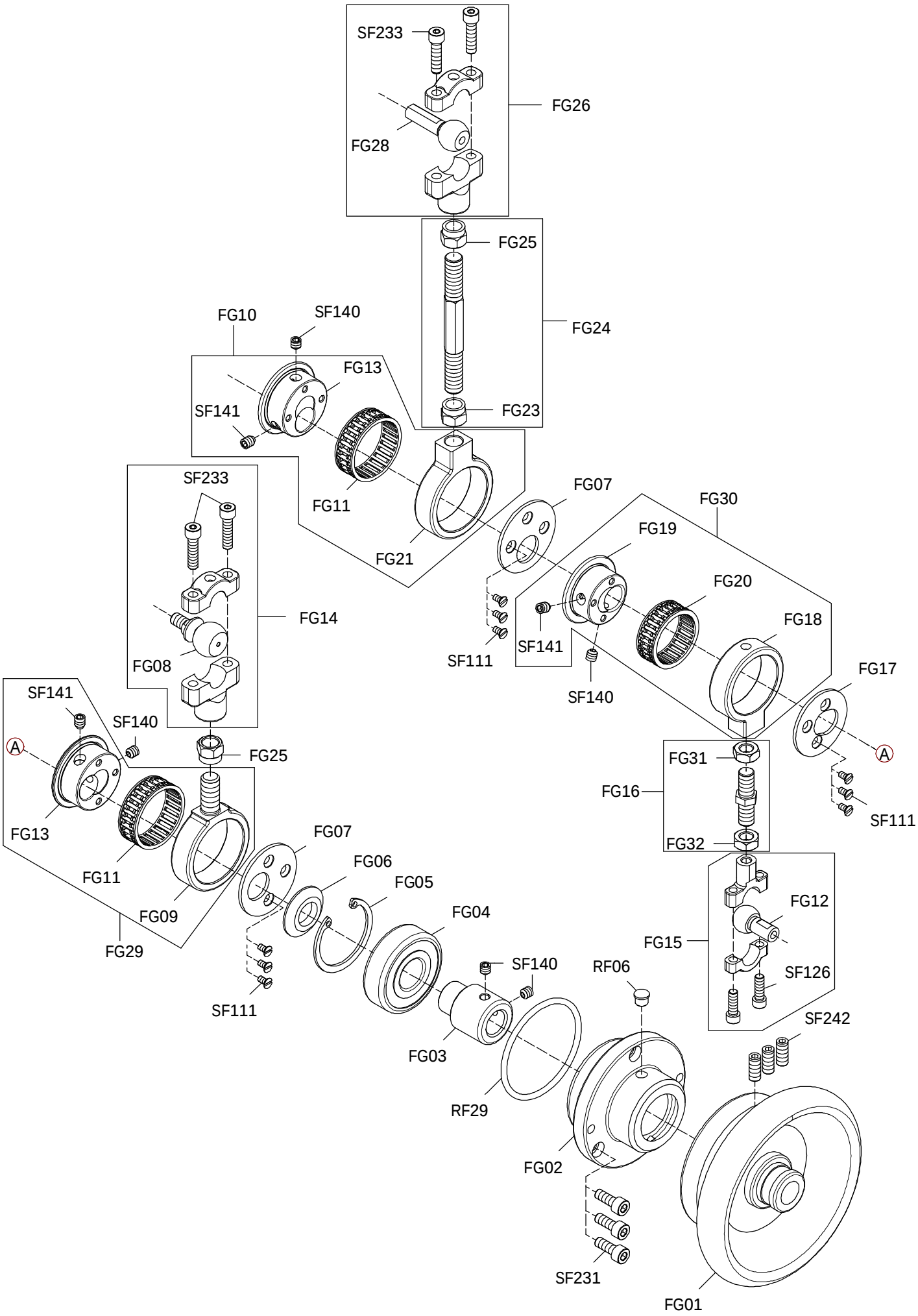
SF233
FG26
FG28
FG25
FG24
FG23
FG10
SF140
FG13
SF141
FG11
FG21
FG07
SF233
FG14
FG08
SF111
FG30
FG19
FG20
FG18
SF141
SF140
FG17
A
A
FG31
FG16
FG32
SF111
SF141
SF140
FG25
FG13
FG11
FG09
FG07
FG06
FG05
FG04
FG29
SF111
FG12
FG15
SF126
SF140
RF06
SF242
FG03
RF29
FG02
SF231
FG01

LOWER MAIN SHAFT DRIVING MECHANISM(1) 下主轴传动结构(1) 6

Ref. No.	Parts. No.	Description	品名	Amt. Req.
1	0777FG01	Pulley	皮带轮	1
2	0777FG02	Shaft Holder	上心座	1
3	0777FG03	Bushing	套管	1
4	0777FG04	Bearing	培林	1
5	0777FG05	Retaining Ring	扣环	1
6	0777FG06	Side Cover	侧盖	1
7	0777FG07	Eccentric Cover	偏心盖	2
8	0777FG08	Connecting Rod Pin	连杆插销	1
9	0777FG09	Eccentric Crust	偏心外壳	1
10	0777FG10	Eccentric C.Set	偏心轮组	1
11	0777FG11	Bearing	培林	2
12	0777FG12	Connecting Rod Pin	连杆插销	1
13	0777FG13	Eccentric	偏心轮	2
14	0777FG14	Connecting Rod C.Set	连杆组	1
15	0777FG15	Connecting Rod C.Set	连杆组	1
16	0777FG16	Adjusting Rod C.Set	调整杆组	1
17	0777FG17	Eccentric Cover	偏心盖	1
18	0777FG18	Eccentric Crust	偏心外壳	1
19	0777FG19	Eccentric	偏心轮	1
20	0777FG20	Bearing	培林	1
21	0777FG21	Eccentric Crust	偏心外壳	1
22	0777FG23	Nut	螺帽	1
23	0777FG24	Shoulder Pole Adjusting Rod C.Set	扁担调整杆组	1
24	0777FG25	Nut	螺帽	2
25	0777FG26	Connecting Rod C.Set	连杆组	1
26	0777FG28	Connecting Rod Pin	连杆插销	1
27	0777FG29	Eccentric C.Set	偏心轮组	1
28	0777FG30	Eccentric C.Set	偏心轮组	1
29	0777FG31	Nut	螺帽	1
30	0777FG32	Nut	螺帽	1
31	0777SF111	Screw(9/64-40x4)	螺丝	9
32	0777SF126	Screw(11/64-40x14)	螺丝	2
33	0777SF140	Screw(7/32-32x5.5)	螺丝	5
34	0777SF141	Screw(7/32-32x6.5)	螺丝	3
35	0777SF231	Screw(M5-0.8x14)	螺丝	3
36	0777SF233	Screw(M5-0.8x20)	螺丝	4
37	0777SF242	Screw(M6-1x14)	螺丝	3
38	0777RF06	Oil Seal Gasket	止油塞	1
39	0777RF29	O-Ring	O形橡胶圈	1

FH

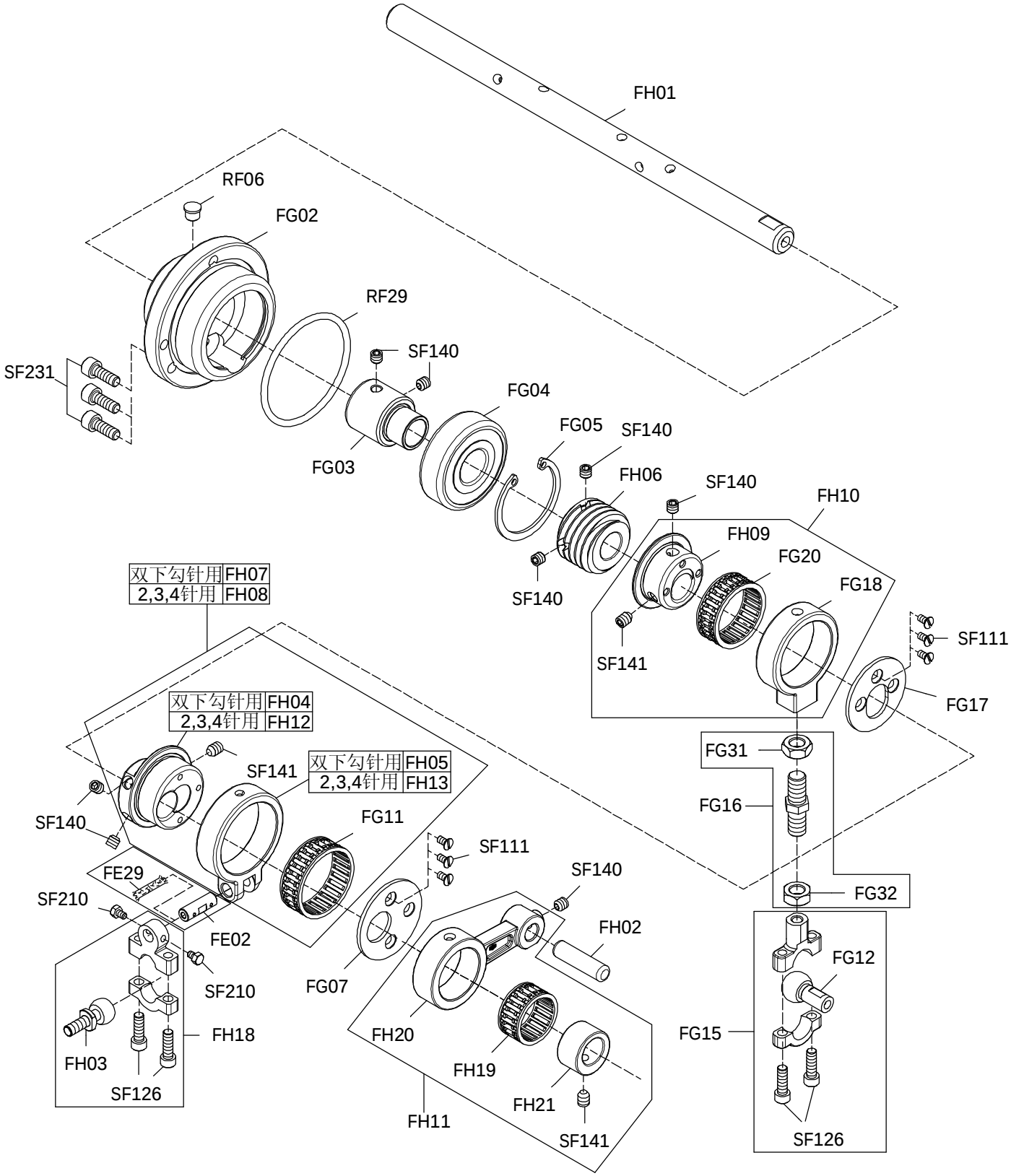
FH01
RF06
FG02
RF29
SF140
SF231
FG04
FG05
SF140
FG03
FH06
SF140
FH10
FH09
FG20
FG18
SF111
SF140
SF141
FG17
双下勾针用 FH07
2,3,4针用 FH08
双下勾针用 FH04
2,3,4针用 FH12
双下勾针用 FH05
2,3,4针用 FH13
SF141
FG31
SF140
FG11
FG16
SF111
FE29
SF140
SF210
FG32
FH02
FE02
FG12
SF210
FG07
FG15
FH18
FH20
FH03
FH19
FH21
SF126
FH11
SF141
SF126

LOWER MAIN SHAFT DRIVING MECHANISM(2) 下主轴传动结构(2) 7

Ref. No.		Parts. No.	Description	品 名	Amt. Req.
1		0777FH01	Lower Shaft	大心	1
2		0777FH02	Pin	插销	1
3		0777FH03	Nucellus	珠心	1
4	★	0777FH04	Eccentric	偏心轮(双下勾针用)	1
5	★	0777FH05	Eccentric Crust	偏心外壳(双下勾针用)	1
6		0777FH06	Worm	蜗杆	1
7	★	0777FH07	Eccentric C.Set	偏心轮组(双下勾针用)	1
8	★	0777FH08	Eccentric C.Set	偏心轮组	1
9		0777FH09	Eccentric	偏心轮	1
10		0777FH10	Eccentric C.Set	偏心轮组	1
11		0777FH11	Connecting Rod C.Set	连杆组	1
12	★	0777FH12	Eccentric	偏心轮	1
13	★	0777FH13	Eccentric Crust	偏心外壳	1
14		0777FH18	Nucellus Rind C.Set	弯心珠壳组	1
15		0777FH19	Bearing	培林	1
16		0777FH20	Connecting Rod	连杆	1
17		0777FH21	Eccentric (Small)	偏心轮(小)	1
18		0777FE02	Connecting Rod Pin	连杆插销	1
19		0777FE29	Cotton Thread	棉线	1
20		0777FG02	Shaft Holder	上心座	1
21		0777FG03	Bushing	套管	1
22		0777FG04	Bearing	培林	1
23		0777FG05	Retaining Ring	扣环	1
24		0777FG07	Eccentric Cover	偏心盖	1
25		0777FG11	Bearing	培林	1
26		0777FG12	Connecting Rod Pin	连杆插销	1
27		0777FG15	Connecting Rod C.Set	连杆组	1
28		0777FG16	Adjusting Rod C.Set	调整杆组	1
29		0777FG17	Eccentric Cover	偏心盖	1
30		0777FG18	Eccentric Crust	偏心外壳	1
31		0777FG20	Bearing	培林	1
32		0777FG31	Nut	螺帽	1
33		0777FG32	Nut	螺帽	1
34		0777SF111	Screw(9/64-40x4)	螺丝	6
35		0777SF126	Screw(11/64-40x14)	螺丝	4
36		0777SF140	Screw(7/32-32x5.5)	螺丝	8
37		0777SF141	Screw(7/32-32x6.5)	螺丝	3
38		0777SF210	Screw(M3-0.5x4)	螺丝	1
39		0777SF231	Screw(M5-0.8x14)	螺丝	3
40		0777RF06	Oil Seal Gasket	止油塞	1
41		0777RF29	O-Ring	O形橡胶圈	1

★请参照附件【针距规格表】

FJ

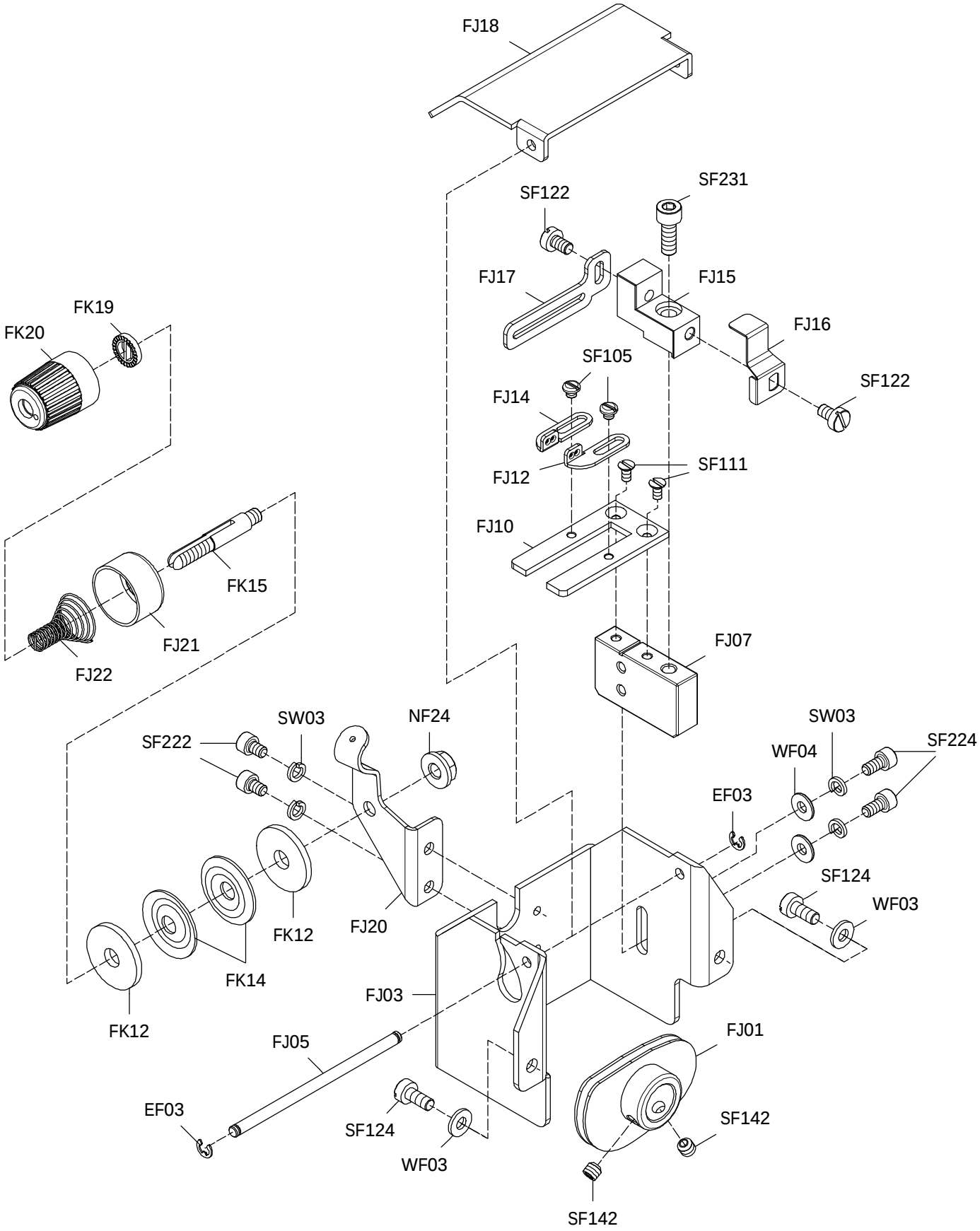
FJ18
SF231
SF122
FJ17
FJ15
FJ16
SF105
SF122
FJ14
FJ12
SF111
FJ10
FJ07
FK19
FK20
FK15
FJ21
FJ22
SW03
NF24
SF222
SW03
SF224
WF04
EF03
SF124
WF03
FJ20
FK12
FK14
FK12
FJ03
FJ05
FJ01
EF03
SF124
WF03
SF142
SF142

LOOPER DRIVING MECNANISM 下勾针驱动结构 8

Ref. No.	Parts. No.	Description	品名	Amt. Req.
1	0777FJ01	Cam	凸轮	1
2	0777FJ03	Junction Box Holder	分线盒座	1
3	0777FJ05	Junction Box Pipe Turn Bar	分线盒盖转动杆	1
4	0777FJ07	Junction Box Presser Foot Holder	分线盒固定座	1
5	0777FJ10	Junction Box Presser Foot Disc(Iron)	分线盒铁线固定片	1
6	0777FJ12	Looper Thread Guide Eyelet(Right)	右过线器	1
7	0777FJ14	Looper Thread Guide Eyelet(Left)	左过线器	1
8	0777FJ15	Adjusting Bar Support	调整杆固定座	1
9	0777FJ16	Spring Slice	弹簧片	1
10	0777FJ17	Junction Box Adjusting Bar	分线盒调整杆	1
11	0777FJ18	Junction Box Pipe	分线盒盖	1
12	0777FJ20	Junction Support	分线固定座	1
13	0777FJ21	Tension Disc Cover	上下控制片	1
14	0777FJ22	Spring	弹簧	1
15	0777FK12	Felt	控线棉	2
16	0777FK14	Tension Disc	控线片	2
17	0777FK15	Tension Post	螺心	1
18	0777FK19	Tension Spring Disc Support	小沙拉齿	1
19	0777FK20	Thread Tension Adjusting Spring Botton(Red)	沙拉转动器(红)	1
20	0777EF03	Retaining Ring	扣环	2
21	0777NF24	Nut	螺帽	1
22	0777WF04	Washer	垫片	2
23	0777SF105	Screw(9/64-40x4)	螺丝	2
24	0777SF111	Screw(9/64-40x4)	螺丝	2
25	0777SF122	Screw(11/64-40x7)	螺丝	2
26	0777SF124	Screw(11/64-40x10)	螺丝	2
27	0777SF142	Screw(7/32-32x4.5)	螺丝	2
28	0777SF222	Screw(M4-0.7x6)	螺丝	2
29	0777SF224	Screw(M4-0.7x8)	螺丝	2
30	0777SF231	Screw(M5-0.8x14)	螺丝	1
31	0777SW03	Spring Washer	弹簧垫片	4
32	0777WF03	Washer	垫片	2

FK

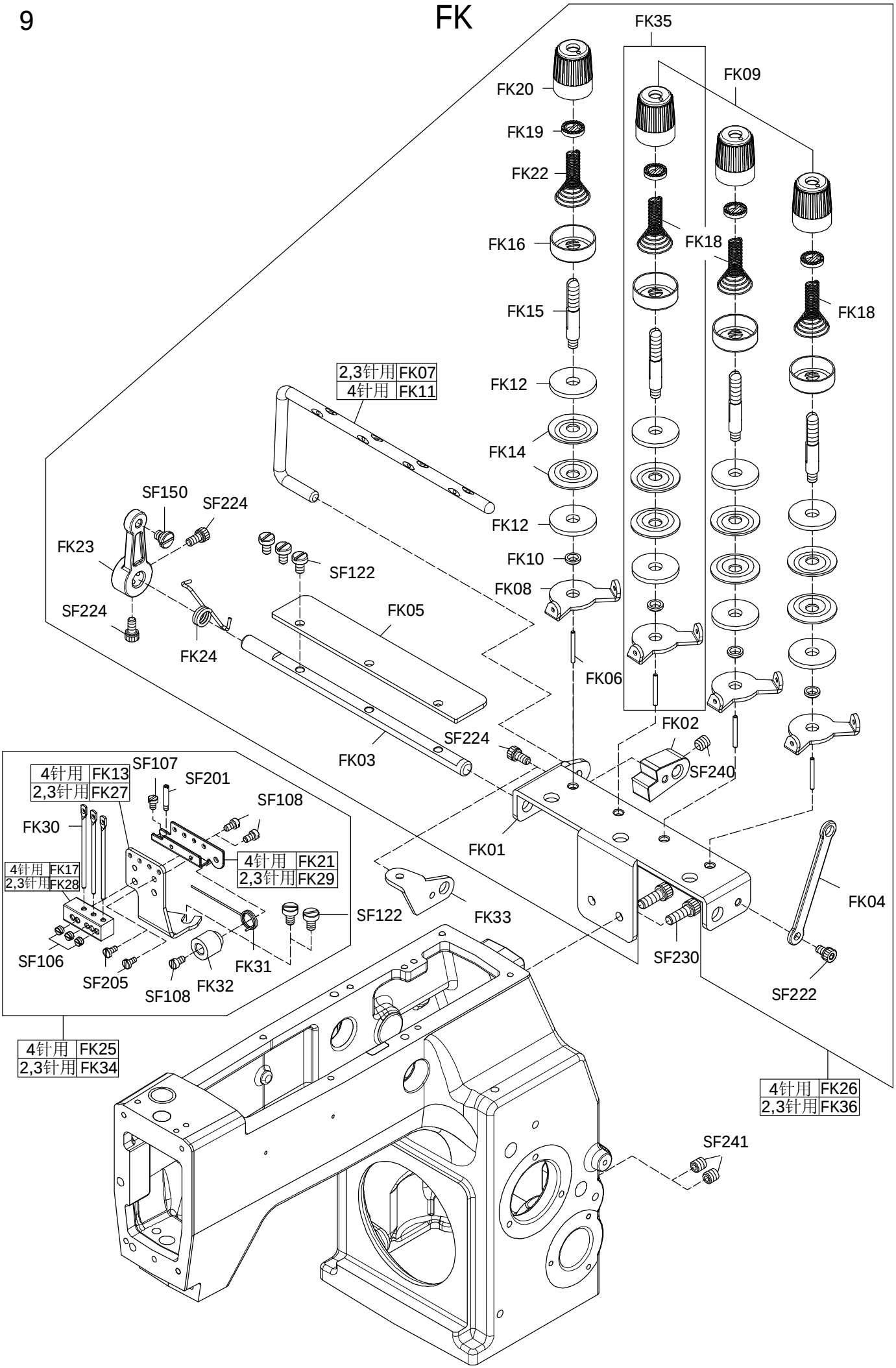
FK35
FK09
FK20
FK19
FK22
FK16
FK15
FK12
FK14
FK12
FK10
FK08
FK06
FK18
FK18
2,3针用 FK07
4针用 FK11
SF150
SF224
FK23
SF224
FK24
SF122
FK05
FK03
SF224
FK02
SF240
FK01
FK04
SF230
SF222
4针用 FK13
2,3针用 FK27
SF107
SF201
SF108
FK30
4针用 FK21
2,3针用 FK29
4针用 FK17
2,3针用 FK28
SF122
FK33
SF106
SF205
SF108
FK32
FK31
4针用 FK25
2,3针用 FK34
4针用 FK26
2,3针用 FK36
SF241

MISCELLANEOUS THREAD EYELETS　　过线结构　　9

Ref. No.		Parts. No.	Description	品名	Amt. Req.
1		0777FK01	Tension Post Support	沙拉组主座	1
2		0777FK02	Thread Guide Bar Fixing Block	沙拉组固定座	1
3		0777FK03	Tension Release Shaft	沙拉组螺座	1
4		0777FK04	Tread Guide Bar Strut	沙拉组支撑杆	1
5		0777FK05	Control Dise	沙拉组控制片	1
6		0777FK06	Line(Iron)	铁线	4
7	★	0777FK07	Lead Pipe	导线管	1
8		0777FK08	Thread Tension Disc Eyelet	沙拉组过线架	4
9		0777FK09	Thread Tension Adjusting Spring Botton(Blue)	沙拉转动器(蓝)	4
10		0777FK10	Tension Post Ferrule	华司	4
11	★	0777FK11	Lead Pipe	导线管(4针用)	1
12		0777FK12	Felt	控线棉	8
13	★	0777FK13	Needle Thread Tension Adjusting Bracket	压线弹簧座(4针用)	1
14		0777FK14	Tension Disc	控线片	8
15		0777FK15	Tension Post	螺心	4
16		0777FK16	Thread Tension Spring Retainer	上下控制片	4
17	★	0777FK17	Eyelet Bar Stand	过线杆固定座(4针用)	1
18		0777FK18	Spring	弹簧	3
19		0777FK19	Tension Spring Disc Support	小沙拉齿	4
20		0777FK20	Thread Tension Adjusting Spring Botton(Red)	沙拉转动器(红)	1
21	★	0777FK21	Presser Foot Holder	固定座(4针用)	1
22		0777FK22	Spring	弹簧	1
23		0777FK23	Thread Pull-Off Lever	沙拉组调整器	1
24		0777FK24	Tension Release Shaft Spring	沙拉组弹簧	1
25	★	0777FK25	Thread Eyelet Tension C.Set	过线组(4针用)	1
26	★	0777FK26	Tension Post Support C.Set	沙拉组主座组(4针用)	1
27	★	0777FK27	Needle Thread Tension Adjusting Bracket	压线弹簧座	1
28	★	0777FK28	Eyelet Bar Stand	过线杆固定座	1
29	★	0777FK29	Presser Foot Holder	固定座	1
30	★	0777FK30	Needle Thread Tension Adjusting Fyelen Bar	过线杆	3
31		0777FK31	Neelde Thread Tension Balance Spring	压线弹簧	1
32		0777FK32	Neelde Thread Tension Adjusting Boton	弹簧调整器	1
33	★	0777FK33	Thread Guide Bar Fixing Block	沙拉组固定座(4针用)	1
34	★	0777FK34	Thread Eyelet Tension C.Set	过线组	1
35	★	0777FK35	Thread Tension Spring Cap C.Set(Blue)	沙拉转动器组(蓝)	3
36	★	0777FK36	Tension Post Support C.Set	沙拉组主座组	1
37		0777SF106	Screw(1/8-44x3)	螺丝	3
38		0777SF107	Screw(1/8-44x5)	螺丝	1
39		0777SF108	Screw(1/8-44x6)	螺丝	3
40		0777SF122	Screw(11/64-40x7)	螺丝	5

★请参照附件【针距规格表】

FK

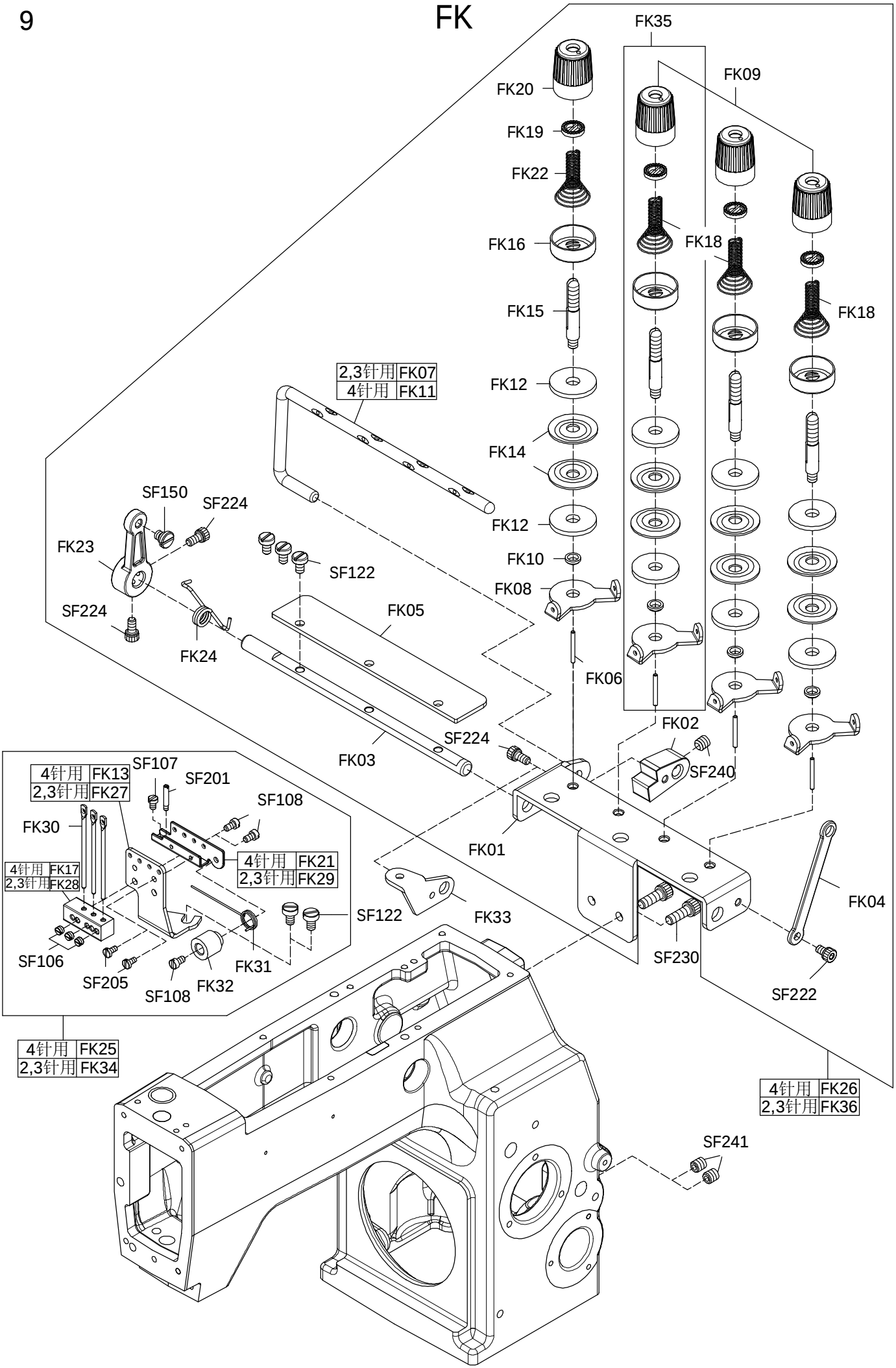
FK35
FK09
FK20
FK19
FK22
FK16
FK15
FK12
FK14
FK12
FK10
FK08
FK06
FK18
FK18
2,3针用 FK07
4针用 FK11
SF150
SF224
FK23
SF224
FK24
SF122
FK05
FK03
SF224
FK02
SF240
FK01
FK04
SF230
SF222
4针用 FK13
2,3针用 FK27
SF107
SF201
SF108
FK30
4针用 FK21
2,3针用 FK29
4针用 FK17
2,3针用 FK28
SF122
FK33
SF106
SF205
SF108
FK32
FK31
4针用 FK25
2,3针用 FK34
4针用 FK26
2,3针用 FK36
SF241

Ref. No.	Parts. No.	Description	品名	Amt. Req.
41	0777SF150	Screw(3/16-32x5.5)……	螺丝……	1
42	0777SF201	Screw(M2.3-0.4x3)……	螺丝……	1
43	0777SF205	Screw(M2.6-0.45x5)……	螺丝……	2
44	0777SF222	Screw(M4-0.7x6)……	螺丝……	1
45	0777SF224	Screw(M4-0.7x8)……	螺丝……	3
46	0777SF230	Screw(M5-0.8x12)……	螺丝……	2
47	0777SF240	Screw(M6-1x6)……	螺丝……	1
48	0777SF241	Screw(M6-1x10)……	螺丝……	2

FL

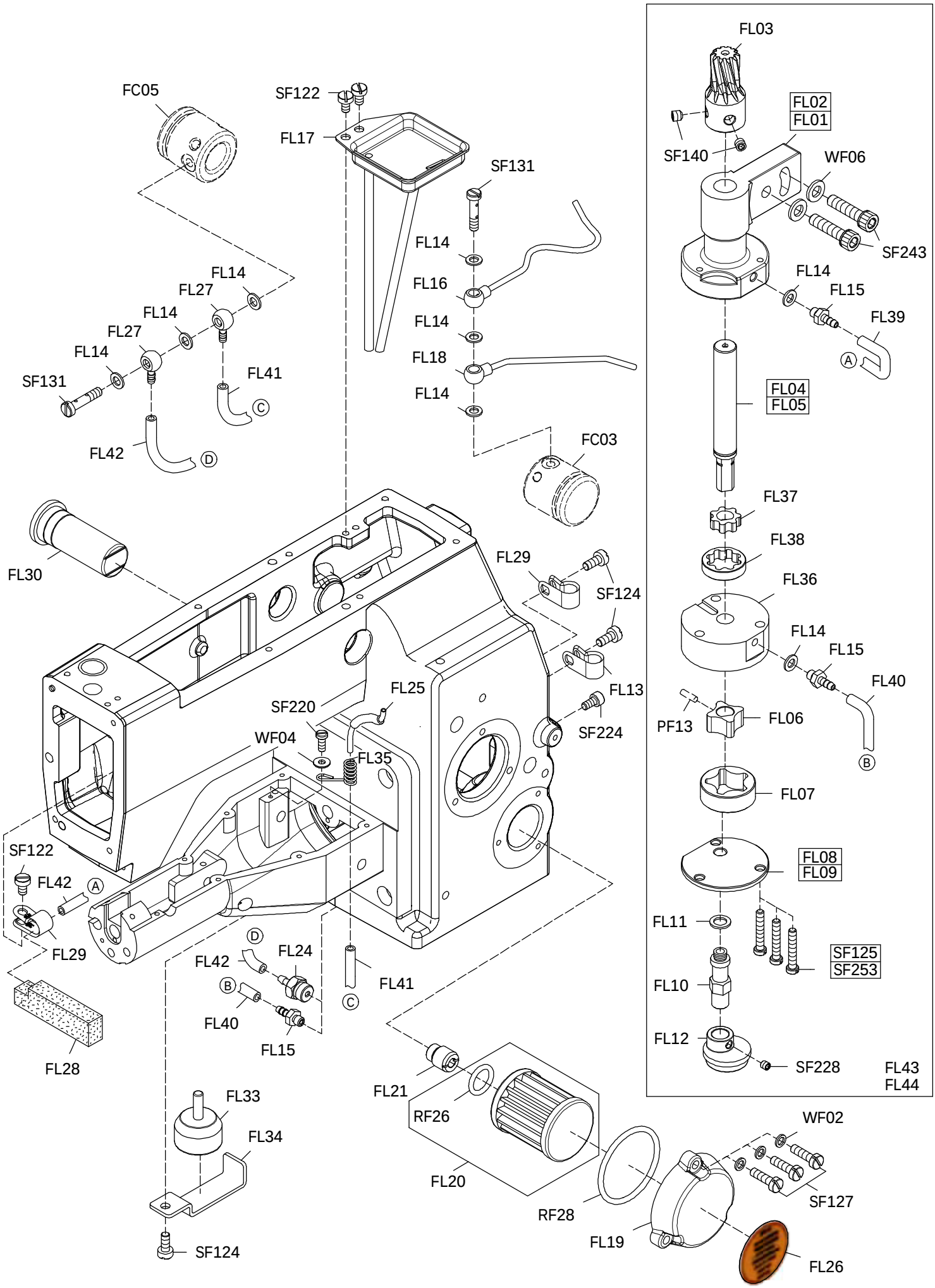
FL03
FL02
FL01
SF140
WF06
SF243
FL14
FL15
FL39
FL04
FL05
FL37
FL38
FL36
FL14
FL15
FL40
PF13
FL06
FL07
FL08
FL09
FL11
SF125
SF253
FL10
FL12
SF228
FL43
FL44
FC05
SF122
FL17
SF131
FL14
FL16
FL14
FL18
FL14
FL14
FL27
FL14
FL27
FL14
SF131
FL41
FL42
FC03
FL30
FL29
SF124
FL13
SF224
FL25
SF220
WF04
FL35
SF122
FL42
FL29
FL28
FL42
FL24
FL40
FL15
FL41
FL33
FL34
SF124
FL21
RF26
FL20
RF28
WF02
SF127
FL19
FL26

Ref. No.		Parts. No.	Description	品名	Amt. Req.
1	●	0777FL01	Oil Pump Frame(Upper)……	油泵本体(上座)(新型)……	1
2	○	0777FL02	Oil Pump Frame(Upper)……	油泵本体(上座)(旧型)……	1
3		0777FL03	Oil Pump Driving Worm Gear……	油泵驱动蜗齿……	1
4	○	0777FL04	Oil Pump Shaft……	油泵主轴(旧型)……	1
5	●	0777FL05	Oil Pump Shaft……	油泵主轴(新型)……	1
6		0777FL06	Oil Pump Frame Pinion……	油泵本体内转子……	1
7		0777FL07	Oil Pump Frame Pinion……	油泵本体内转子……	1
8	○	0777FL08	Lower Cover……	下座盖(旧型)……	1
9	●	0777FL09	Lower Cover……	下座盖(新型)……	1
10		0777FL10	Suction Pipe……	过油心……	1
11		0777FL11	Washer……	垫片……	1
12		0777FL12	Oil Screen……	滤油网……	1
13		0777FL13	Tube Clamp(UC-1.5)……	固定座……	1
14		0777FL14	Washer……	垫片……	8
15		0777FL15	Suction Pipe……	吸油管……	3
16		0777FL16	Vinyl Pipe……	弯管……	1
17		0777FL17	Oil Receiver……	润滑油接收盘……	1
18		0777FL18	Vinyl Pipe……	弯管……	1
19		0777FL19	Oil Filter Cap……	油镜盖……	1
20		0777FL20	Oil Filter C.Set……	滤油器……	1
21		0777FL21	Oil Filter Connector……	滤油器连接管……	1
22		0777FL24	Suction Pipe……	吸油管……	1
23		0777FL25	Oil Tube……	油管……	1
24		0777FL26	Warning Sticker……	警告贴纸……	1
25		0777FL27	Oil Tube Joint……	油管铜头……	2
26		0777FL28	Felt……	吸油棉……	1
27		0777FL29	Tube Clamp(UC-0.5)……	固定座……	2
28		0777FL30	Oil Sight Gauge……	油镜……	1
29		0777FL33	Buoy……	浮筒……	1
30		0777FL34	Buoy Presser Foot Holder……	浮筒固定座……	1
31		0777FL35	Spring……	弹簧……	1
32	●	0777FL36	Oil Pump Frame(Lower)……	油泵本体(下座)(新型)……	1
33	●	0777FL37	Oil Pump Frame Pinion……	油泵本体内转子(新型)……	1
34	●	0777FL38	Oil Pump Frame Pinion……	油泵本体内转子(新型)……	1
35		0777FL39	Oil Tube(ø3xø5x410mm)……	油管……	1

FL43&FL44专用符号说明：

无标记:表示皆可互换使用

○:旧型专用品

●:新型专用品

FL

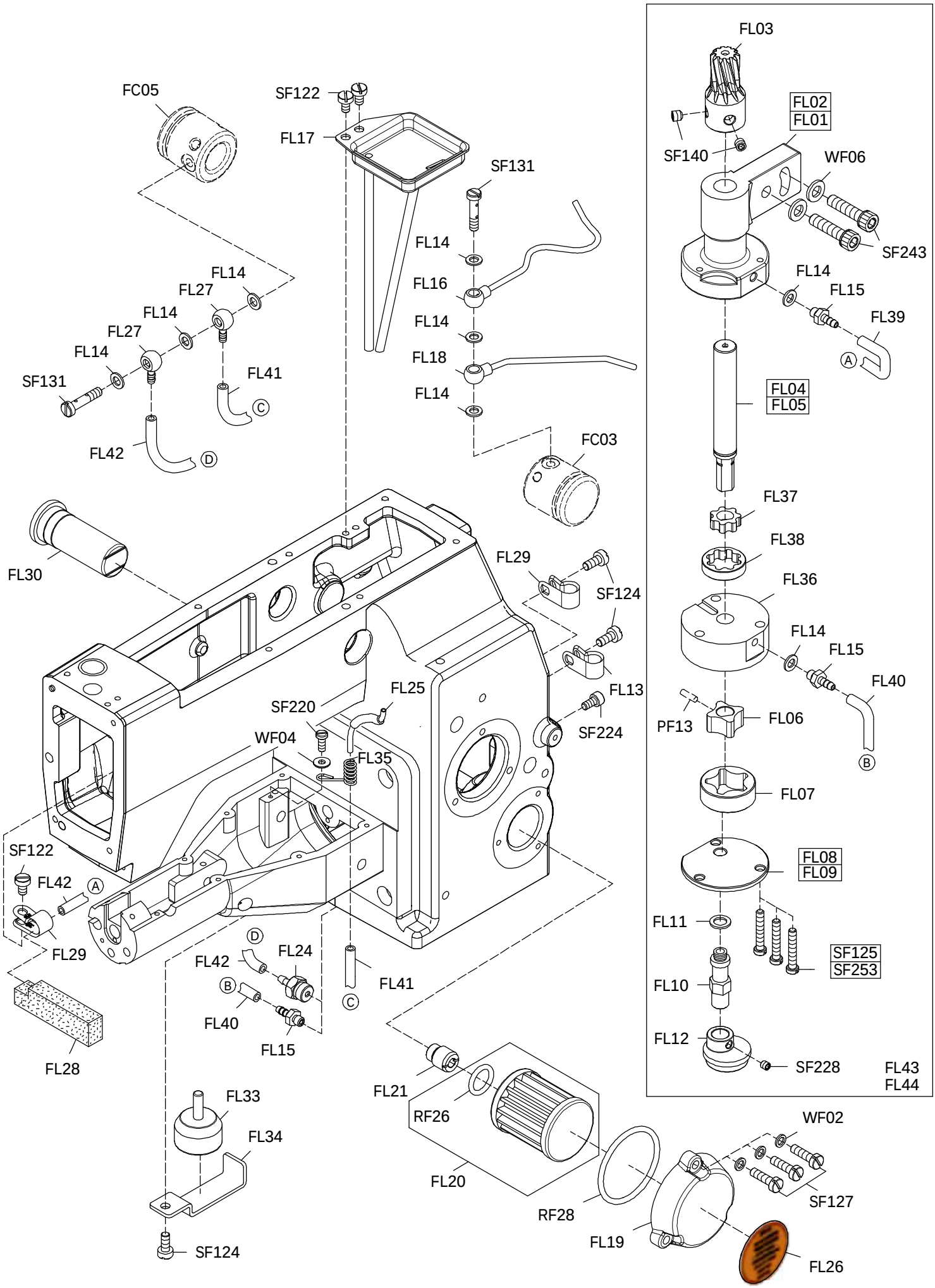
FL03
FL02
FL01
SF140
WF06
SF243
FL14
FL15
FL39
FL04
FL05
FL37
FL38
FL36
FL14
FL15
FL40
PF13
FL06
FL07
FL08
FL09
FL11
SF125
SF253
FL10
FL12
SF228
FL43
FL44
FC05
SF122
FL17
SF131
FL14
FL16
FL14
FL18
FL14
FL14
FL27
FL14
FL27
FL14
SF131
FL41
FL42
FC03
FL30
FL29
SF124
FL13
SF224
FL25
SF220
WF04
FL35
SF122
FL42
FL29
FL28
FL42
FL24
FL40
FL15
FL41
FL33
FL34
SF124
FL21
RF26
FL20
RF28
WF02
SF127
FL19
FL26

Ref. No.		Parts. No.	Description	品名	Amt. Req.
36		0777FL40	Oil Tube(ø3xø5x100mm)……	油管……	1
37		0777FL41	Oil Tube(ø3xø5x280mm)……	油管……	1
38		0777FL42	Oil Tube(ø3xø5x650mm)……	油管……	1
39	○	0777FL43	Oil Pump,Complete Set……	泵浦组(旧型专用)……	1
40	●	0777FL44	Oil Pump,Complete Set……	泵浦组(新型专用)……	1
41		0777RF26	O-Ring……	O形橡胶圈……	1
42		0777RF28	O-Ring……	O形橡胶圈……	1
43		0777SF122	Screw(11/64-40x7)……	螺丝……	3
44		0777SF124	Screw(11/64-40x10)……	螺丝……	3
45	○	0777SF125	Screw(11/64-40x12)……	螺丝(旧型专用)……	3
46		0777SF127	Screw(11/64-40x16)……	螺丝……	3
47		0777SF131	Screw(3/16-24x22)……	螺丝……	2
48		0777SF140	Screw(7/32-32x5.5)……	螺丝……	2
49		0777SF220	Screw(M4-0.7x10)……	螺丝……	1
50		0777SF224	Screw(M4-0.7x8)……	螺丝……	1
51		0777SF228	Screw(M4-0.7x4)……	螺丝……	1
52		0777SF243	Screw(M6-1x25)……	螺丝……	2
53	●	0777SF253	Screw(M4-0.7x24)……	螺丝(新型专用)……	3
54		0777WF02	Washer……	垫片……	3
55		0777WF04	Washer……	垫片……	1
56		0777WF06	Washer……	垫片……	2
57	○	0777PF13	Pin……	插销(旧型专用)……	1

FL43&FL44专用符号说明：

无标记:表示皆可互换使用

○:旧型专用品

●:新型专用品

FM

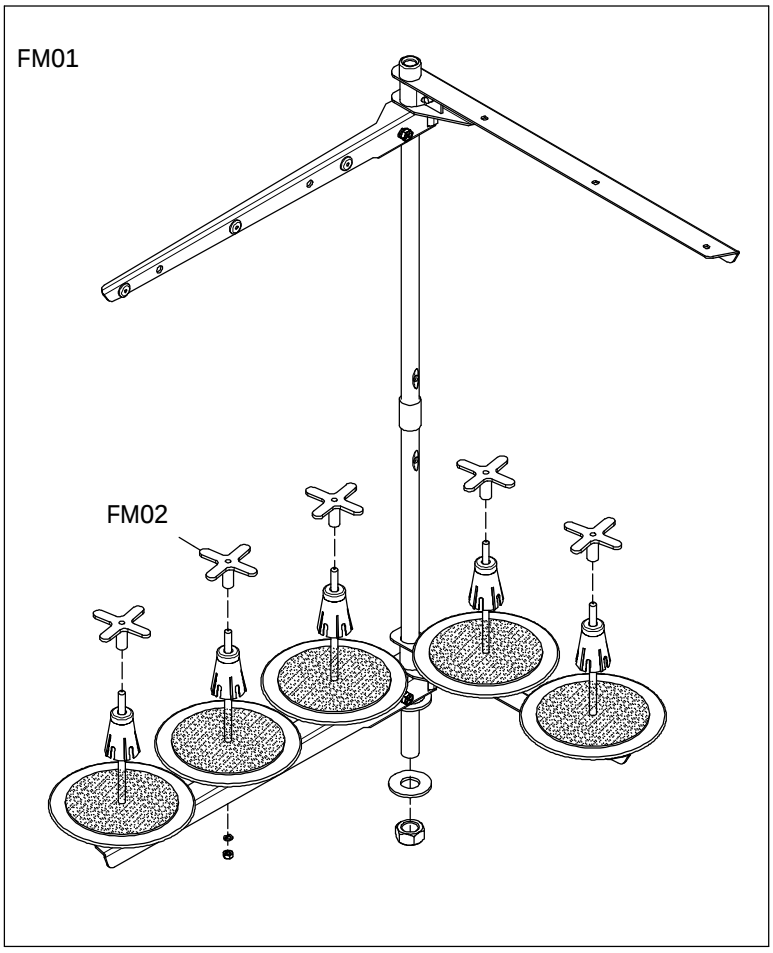
FM01
FM02

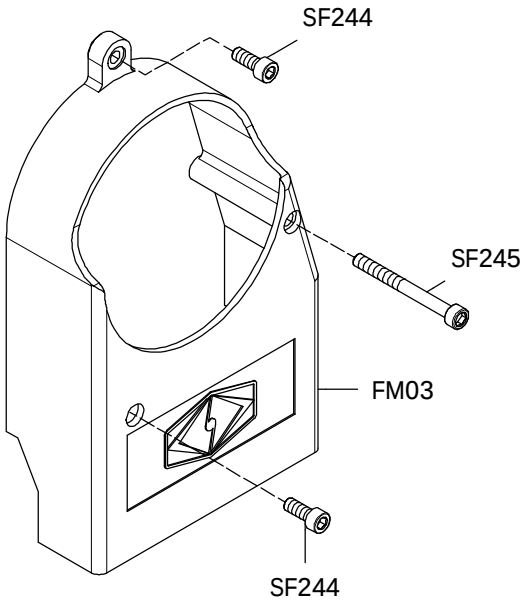
SF244
SF245
FM03
SF244

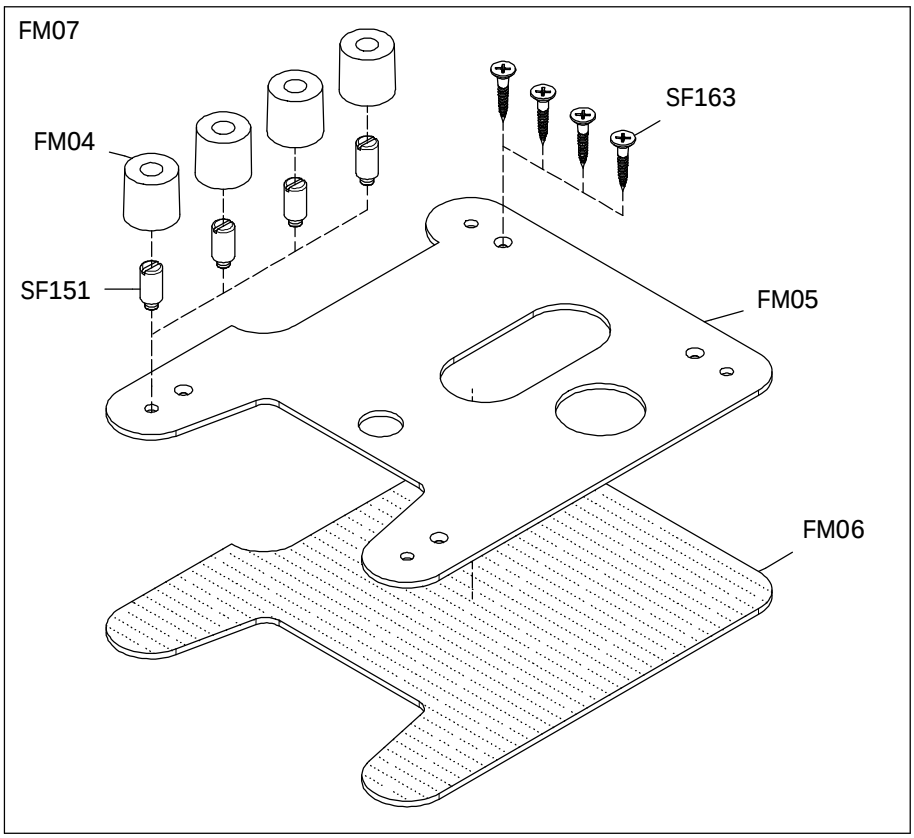
FM07
SF163
FM04
SF151
FM05
FM06

Ref. No.	Parts. No.	Description	品名	Amt. Req.
1	0777FM01	Threa Stand C.Set	线架组	1
2	0777FM02	Rubber Spool Cushion	十字橡胶	5
3	0777FM03	Belt Cover	皮带盖	1
4	0777FM04	Rubber(Base)	底座橡胶	4
5	0777FM05	Batholith	底盘	1
6	0777FM06	Felt	羊毛毡	1
7	0777FM07	Batholith C.Set	底盘组	1
8	0777SF151	Screw(1/4-32x3)	螺丝	4
9	0777SF163	Wood Screw(ø3x26)	木螺丝	4
10	0777SF244	Screw(M6-1x16)	螺丝	2
11	0777SF245	Screw(M6-1x60)	螺丝	1

CP03

选择配备件

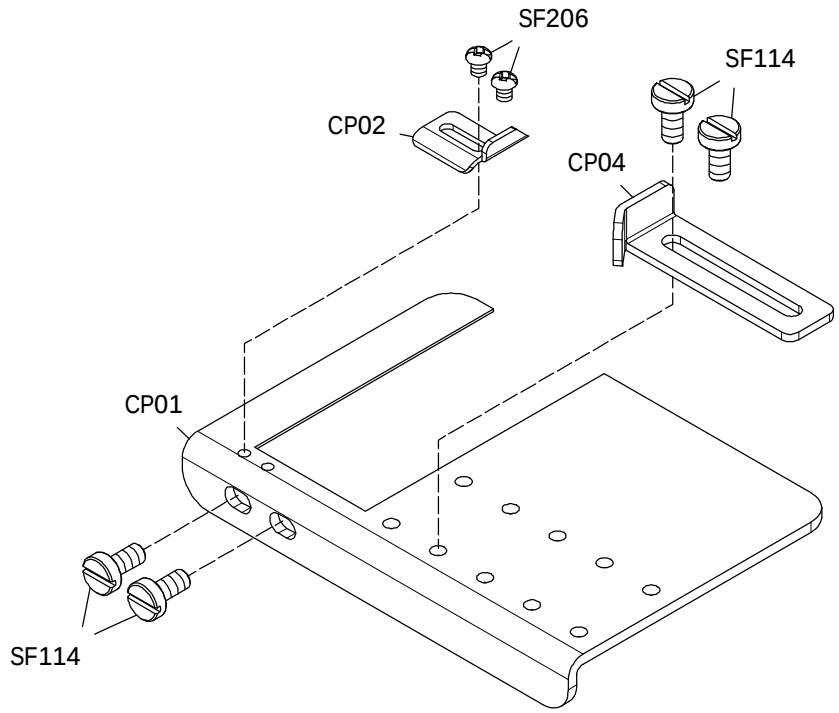

CP13

选择配备件

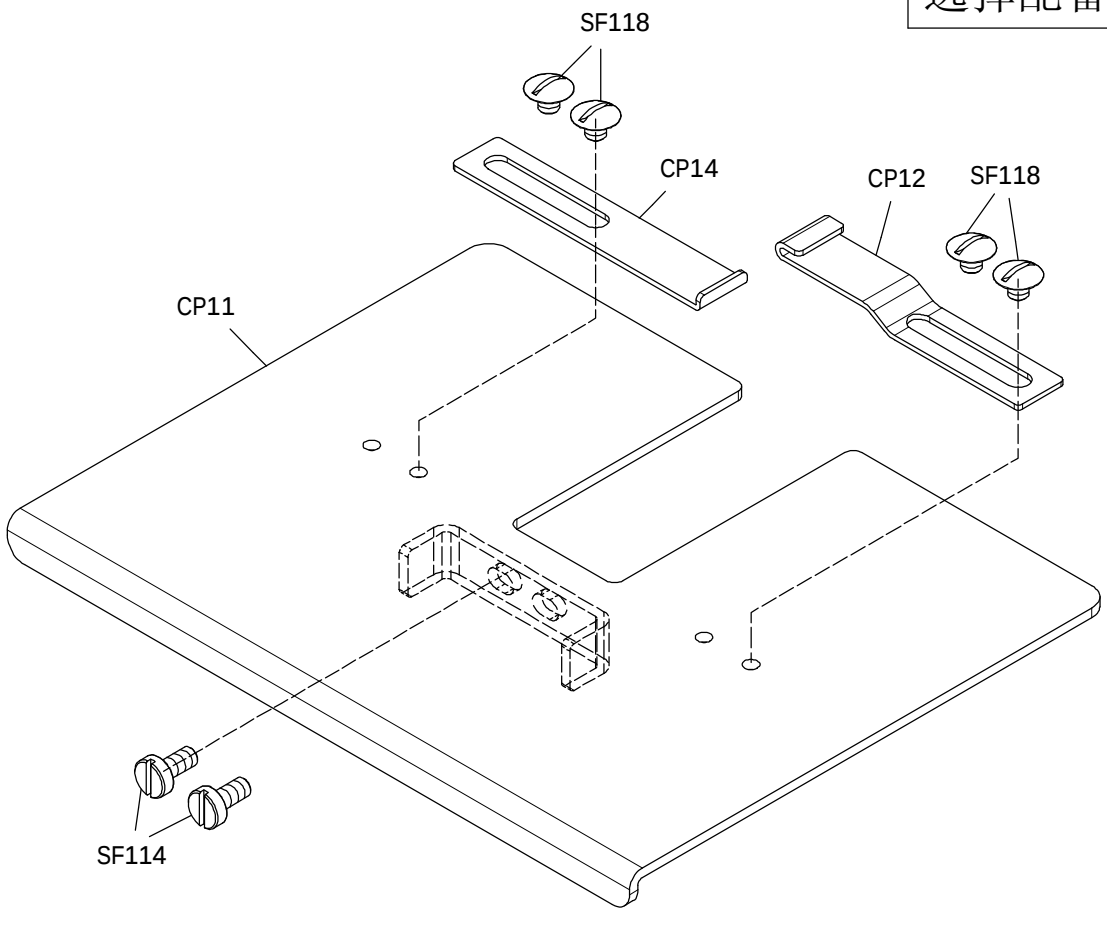

Ref. No.	Parts. No.	Description	品名	Amt. Req.
1	0777CP01	Lap Former Guide	导布板	1
2	0777CP02	Fabric Guide(Small)	小挡边	1
3	0777CP03	Lap Former Guide C.Set	导布板组	1
4	0777CP04	Fabric Guide(Big)	大挡边	1
5	0777CP11	Lap Former Guide	导布板	1
6	0777CP12	Fender Plate	挡片	1
7	0777CP13	Lap Former Guide C.Set	导布板组	1
8	0777CP14	Fender Plate	挡片	1
9	0777SF114	Screw(9/64-40x8)	螺丝	6
10	0777SF206	Screw(M2.6-0.45x3)	螺丝	2
11	0777SF118	Screw(9/64-40x4)	螺丝	4

FP

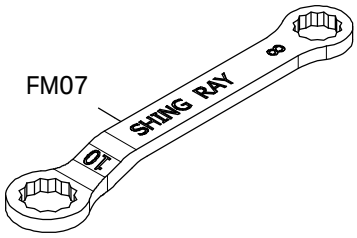
FM07
SHING RAY
10
8

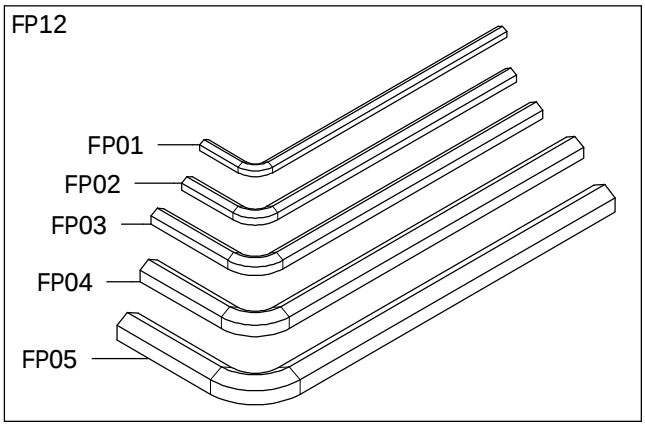
FP12
FP01
FP02
FP03
FP04
FP05

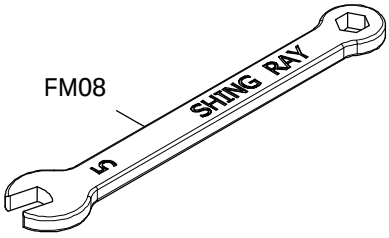
FM08
SHING RAY
5

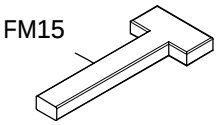
FM15

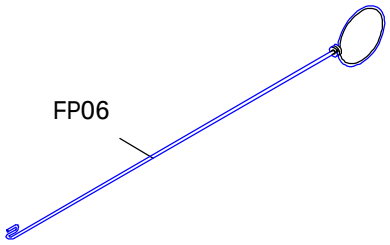
FP06

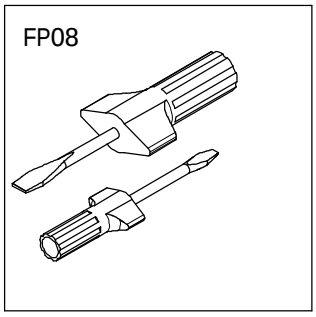
FP08

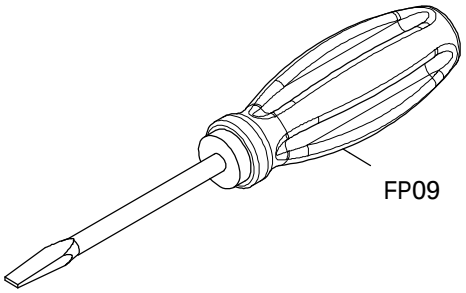
FP09

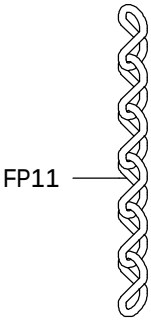
FP11

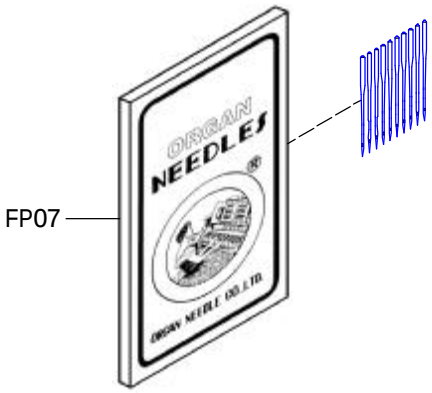
FP07
ORGAN
NEEDLES

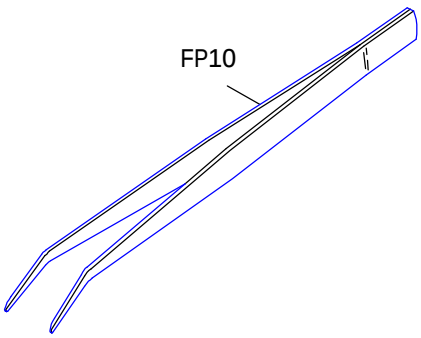
FP10

ATTACHMENT BOX　　附件盒　　13

Ref. No.	Parts. No.	Description	品　　名	Amt. Req.
1	0777FP01	Hexagonal Wrench(2.0mm)……	内六角扳手……	1
2	0777FP02	Hexagonal Wrench(2.5mm)……	内六角扳手……	1
3	0777FP03	Hexagonal Wrench(3.0mm)……	内六角扳手……	1
4	0777FP04	Hexagonal Wrench(4.0mm)……	内六角扳手……	1
5	0777FP05	Hexagonal Wrench(5.0mm)……	内六角扳手……	1
6	0777FP06	Threading Wire……	穿线铁丝……	1
7	0777FP07	Needle(TVx7)……	机针……	10
8	0777FP08	Screwdriver C.Set(Small)……	螺丝起子组(小)……	1
9	0777FP09	Screwdriver(Middle)……	绿柄螺丝起子(中）……	1
10	0777FP10	Thread Tweezers……	穿线夹(TWE-7)……	1
11	0777FP11	Chain……	链条……	1
12	0777FP12	Hexagonal Wrench C.Set……	内六角扳手组……	1
13	0777FM07	Ring Spanner……	梅花扳手(8～10号)……	1
14	0777FM08	Spanner……	5号扳手……	1
15	0777FM15	T-Model Norma……	T型定规……	1

FQ

FQ01

FQ02

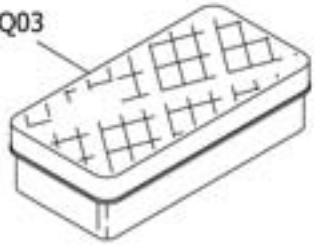
FQ03

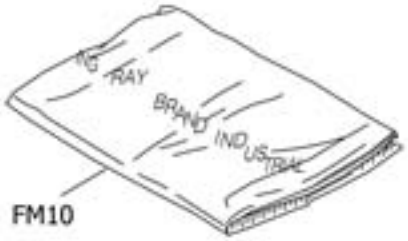
FM10

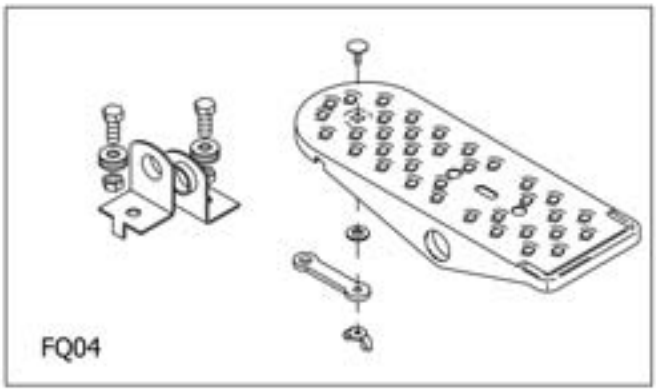
FQ04

FQ07
FW-777
FQ08

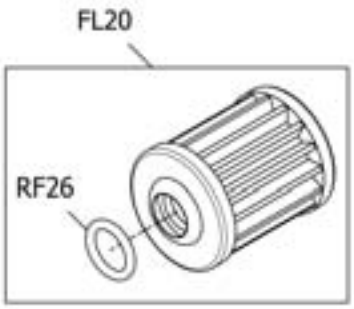
FL20
RF26

FQ05

FQ06
SEWING MACHINE OIL

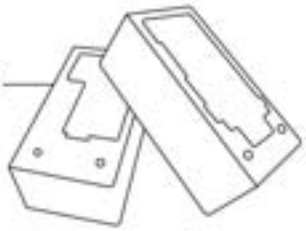
FQ12

FQ10

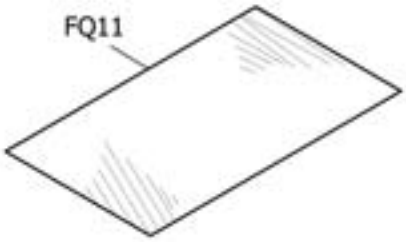
FQ11

FQ09
DESICCANT

Ref. No.	Parts. No.	Description	品名	Amt. Req.
1	0777FQ01	Oiler	油瓶	1
2	0777FQ02	Funnel	漏斗	1
3	0777FQ03	Attachment Box	附件盒	1
4	0777FQ04	Pedal C.Set	脚踏板组	1
5	0777FQ05	Screwdriver(Big)	绿柄螺丝起子(大)	1
6	0777FQ06	Oil	润滑油(0.8L)	1
7	0777FQ07	Parts Book	零件图	1
8	0777FQ08	Soleplate Map	底板图	1
9	0777FQ09	Desiccant	干燥剂(30g)	1
10	0777FQ10	Inspection Certificate	检验合格证	1
11	0777FQ11	Oilpaper	油纸	1
12	0777FQ12	Foam	保丽龙	1
13	0777FM10	Sleeping Bag	防护套	1
14	0777FL20	Oil Filter C.Set	滤油器	1
15	0777RF26	O-Ring	O形橡胶圈	1

FW-777针距规格表

配合 \ 品名 / 规格		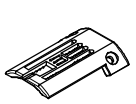 3排针板	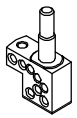 针镩	押脚组	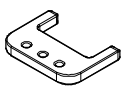 过线导片	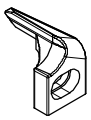 牛角-右	牛角-左	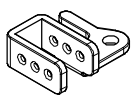 针棒过线	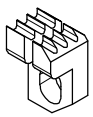 小齿	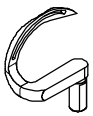 弯针/下勾针	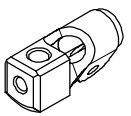 弯针座	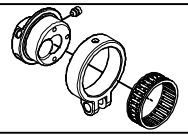 偏心轮组		
倒骨 (出厂/标准配备)	240	△777101240	△777300240	请参考押脚组规格表	△0777FA10	0777FB03	0777FB04	0777FC15	△0777FE16	0777FE22	0777FE24	0777FH08 整组	0777FH12	0777FH13
	248	△777101248	△777300248											
	348	△777101348	△777300348											
	356	△777101356	△777300356											
	364	△777101364	△777300364											
立骨 (选择配备-A)	240	△777103240	△777300240			0777FB06	0777FB07		0777FE26 (旧号： FE16-3)					
	248	△777103248	△777300248											
	348	△777103348	△777300348											
	356	△777103356	△777300356											
	364	△777103364	△777300364											
4针用 (选择配备-B)	464	▲777100464	▲777300464		▲0777FA31	0777FB03	0777FB04	▲0777FC06	▲0777FE31 (旧号 FE16-4)					
双下勾针/ 袜类用 (选择配备-C)	264	777118264	777300264		0777FA10			0777FC15	0777FE16	0777FE40 0777FE41	0777FE34	0777FH07 整组	0777FH04	0777FH05

说明1:原4针配件自行拆装改换3针配件时(或3针改换4针),需部分更换的配件:『△』4针改换3针专用配备;&『▲』3针改换4针专用配备。

FW-777针距规格表

品名 / 配合	规格	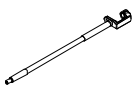	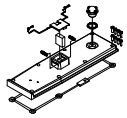			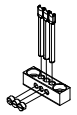			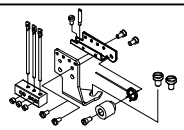			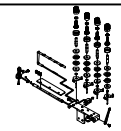		
		弯针心	上盖组	自行更换件,参考说明1		过线杆固定座组	自行更换件,参考说明1		过线组	自行更换件,参考说明1		沙拉组	自行更换件,参考说明1	
倒骨 (出厂/标准配备)	240	0777FE25	△0777FA30 整组	△0777FA15	▲0777FA14 *2只	△0777FC39 整组	△0777FC27	▲0777FC07	△0777FK34 整组	△0777FK27	▲0777FK13	△0777FK36 整组	△0777FK07	▲0777FK11
	248			△0777FA16	▲0777FA32		△0777FC28 *3只	▲0777FC28 *4只		△0777FK28	▲0777FK17		△0777FK35 *3组	▲0777FK35 *4组
	348			△0777FA18	▲0777FA28 (右)		△0777SF106 *3只	▲0777SF106 *4只		△0777FK29	▲0777FK21			▲0777FK33
	356			△0777FA19	▲0777FA29 (左)					△0777FK30 *3只	▲0777FK30 *4只			
	364			△0777FA20 *8只						△0777SF106 *3只	▲0777SF106 *4只			
立骨 (选择配备-A)	240			△0777FA21										
	248			△0777FA22										
	348			△0777PF10										
	356													
	364													
4针用 (选择配备-B)	464		▲0777FA33 整组			▲0777FC18 整组			▲0777FK25 整组			▲0777FK26 整组		
双下勾针/ 袜类用 (选择配备-C)	264	0777FE36	0777FA30			0777FC39			0777FK34			0777FK36		

说明1:原4针配件自行拆装改换3针配件时(或3针改换4针),需部分更换的配件:『△』4针改换3针专用配备;&『▲』3针改换4针专用配备。

FW-777押脚组规格表

品名 / 规格		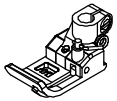								
	标准配备-一般押脚	选配-挡边押脚								
240	777201240	X								
248	777201248	X								
264	777201264	X								
348	777201348	X								
356	777201356	777245356								
364	777201364	X								
464	777201464	X								

星锐缝纫机(嘉兴)有限公司

车台安装位置图 比例:1/1

图档编号:FQ08

*使用方法:将此张1:1尺寸图置于针车桌板上,再依序将Ⓐ与Ⓑ对齐后,可直接钻孔使用.

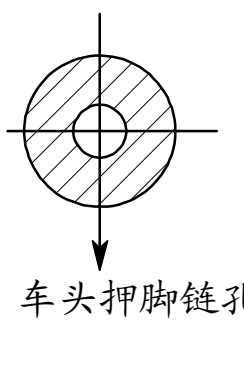

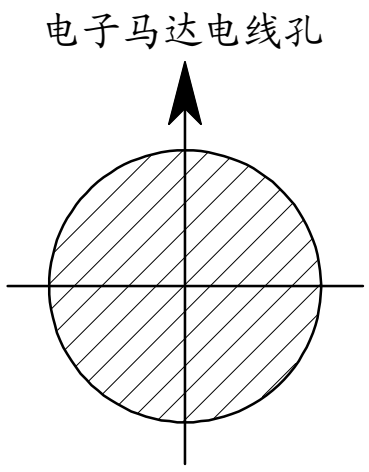

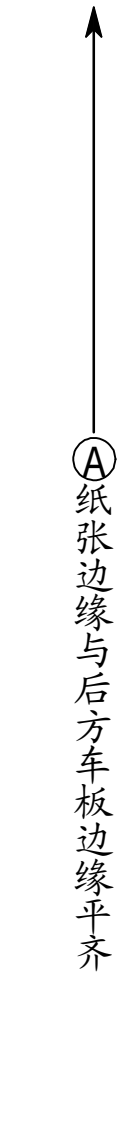

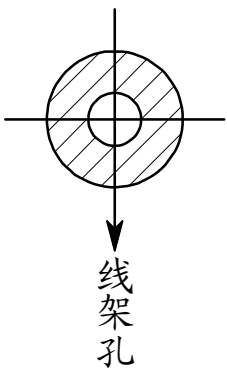

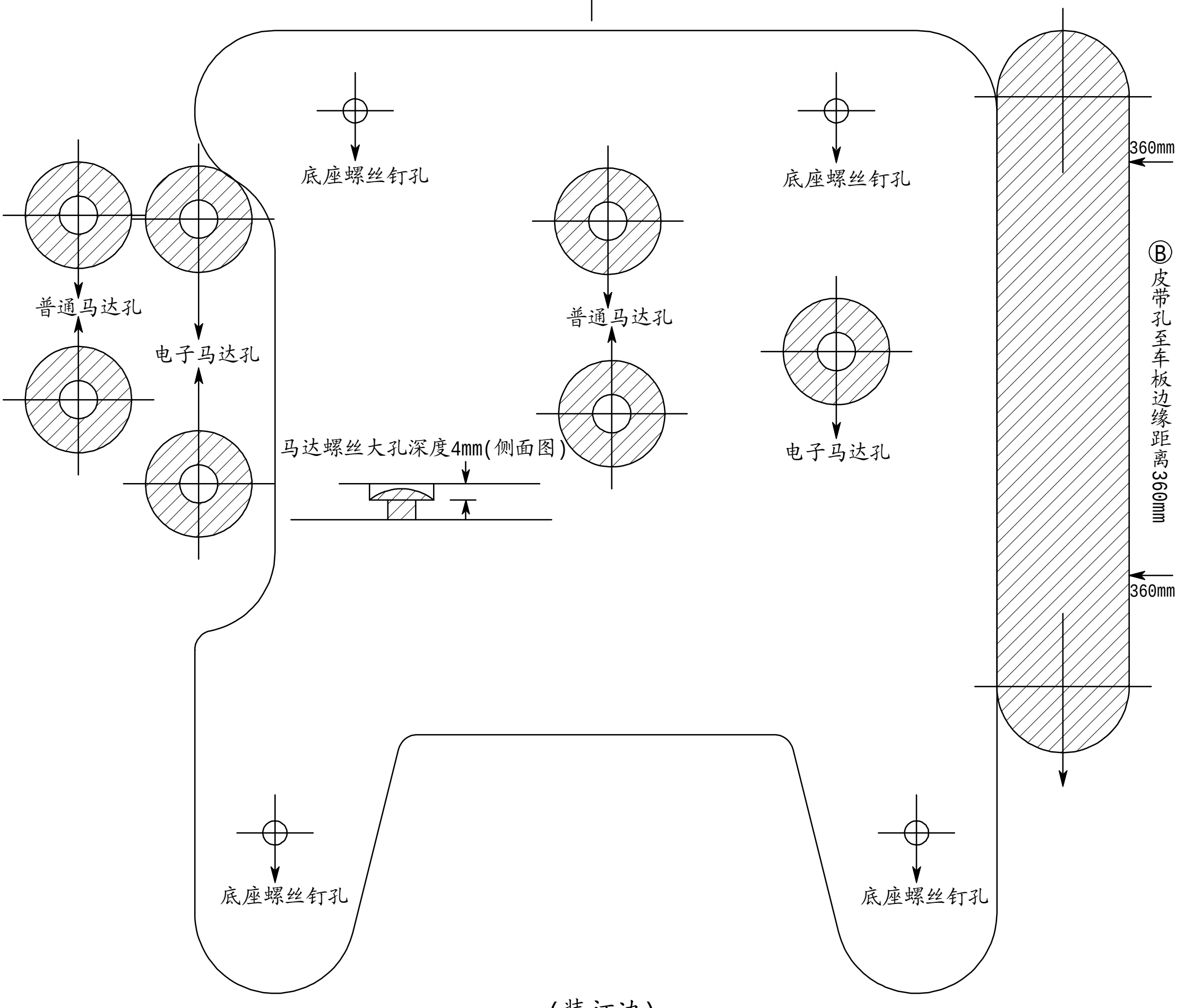

(装订边)